OPERATOR'S MANUAL



TANDEM ROLLER

CT160, CT260

EN - 9831/7750 ISSUE 4 - 12/2019

THIS MANUAL SHOULD ALWAYS STAY WITH THE MACHINE

OPERATOR'S MANUAL

TANDEM ROLLER
CT160, CT260

EN - 9831/7750 - ISSUE 4 - 12/2019

This manual contains original instructions, verified by the manufacturer (or their authorized representative).

Copyright 2018 © JCB SERVICE
All rights reserved. No part of this publication may be reproduced, stored in a retrieval system, or transmitted in any form or by any other means, electronic, mechanical, photocopying or otherwise, without prior permission from JCB SERVICE.

www.jcb.com

Foreword

The Operator's Manual

⚠

You and others can be killed or seriously injured if you operate or maintain the machine without first studying the Operator's Manual. You must understand and follow the instructions in the Operator's Manual. If you do not understand anything, ask your employer or JCB dealer to explain it.

Do not operate the machine without an Operator's Manual, or if there is anything on the machine you do not understand.

Treat the Operator's Manual as part of the machine. Keep it clean and in good condition. Replace the Operator's Manual immediately if it is lost, damaged or becomes unreadable.

California Proposition 65

⚠ **WARNING** Diesel engine exhaust and some of its constituents are known to the State of California to cause cancer, birth defects, and other reproductive harm.

Machine Delivery and Installation

Even if you have operated this type of equipment before, it is very important that your new machines operations and functions are explained to you by a JCB Dealer Representative following delivery of your new machine.

Following the installation you will know how to gain maximum productivity and performance from your new product.

Please contact your local JCB dealer if the Installation Form (included in this manual) has not yet been completed with you.

Your local JCB Dealer is

Notes:

Contents **Page No.**

Acronyms Glossary vi

Introduction
About this Manual
Using the Manual 1
Left-Hand Side, Right-Hand Side 1
Cab/Canopy 1
Cross References 1
Safety
Safety - Yours and Others 2
Safety Warnings 2
General Safety 3
Clothing and Personal Protective Equipment (PPE) 4

About the Product
Introduction
General 5
Name and Address of the Manufacturer 5
Product Compliance 5
Description
General 6
Intended Use 6
Danger Zone 7
Main Component Locations 8
Product and Component Identification
Machine 9
Engine 9
Operator Protective Structure 10
Safety Labels
General 12
Safety Label Identification 13
Operator Station
Component Locations 16
Interior Switches
Ignition Switch 17
Console Switches
General 18
Road Lights 18
Direction Indicators 18
Hazard Warning Lights 18
Front Work Lights 19
Rear Work Lights 19
Horn 19
Beacon 19
Automatic Vibration 19
Front Vibration 19
Rear Vibration 19

Operation
Introduction
General 21

Operating Safety
General 22
Worksite Safety 24
Risk Assessment 25
Walk-Around Inspection
General 27
Entering and Leaving the Operator Station
General 28
Battery Isolator
General 30
Before Starting the Engine
General 31
Operator Seat
General 32
Basic Seat 32
Seat Belt
General 34
Inertia Reel Seat Belt 34
Starting the Engine
General 36
Stopping and Parking
General 39
Safety Equipment
Articulation Lock 41
Drive Controls
Steering Wheel 43
Hand Throttle Control 43
Transmission Drive Lever 43
Instruments
Instrument Panel 45
Getting the Machine Moving
General 47
Slopes
General 48
Working with the Drum
Working without Vibration 49
Working with Vibration 49
Sprinklers and Scrapers 50
Power Sockets
Auxiliary Power Socket 52
Fire Extinguisher
General 53
Moving a Disabled Machine
General 54
Jump-Starting the Engine 54
Retrieval 55
Lifting the Machine
General 60
Transporting the Machine
General 62
Loading the Machine onto the Transporting Vehicle/Trailer 62

Operating Environment
General 66
Operating in Low Temperatures 66
Operating in High Temperatures 67
Refuelling
General 68
Filling the Tank 68

Preservation and Storage
Cleaning
General 69
Preparation 70
Checking For Damage
General 71
Storage
General 72
Put into Storage 72
During Storage 72
Take out of Storage 73
Security
General 74
Construction Equipment Security and Registration Scheme (CESAR) 74
LiveLink 74

Maintenance
Introduction
General 75
Owner/Operator Support 75
Service/Maintenance Agreements 76
Initial Service and Inspection 76
Obtaining Spare Parts 76
Maintenance Safety
General 77
Fluids and Lubricants 78
Maintenance Schedules
General 83
How to Use the Maintenance Schedules 83
Maintenance Intervals 83
Pre-start Cold Checks, Service Points and Fluid Levels 84
Functional Tests and Final Inspection 85
Maintenance Positions
General 87
Service Points
General 88
Access Apertures
Engine Compartment Cover 90
Tools
General 92
Body and Framework
General 93
Operator Station
Operator Protective Structure 94

Seat 94
Seat Belt 94
Controls 94
Safety Equipment
Check (Operation) 95
Engine
General 96
Oil 96
Front End Accessory Drive (FEAD) Belt 99
Exhaust 100
Air Filter
General 101
Outer Element 101
Dust Valve 102
Fuel System
General 103
Tank 104
Pre-Filter Element 105
Fuel Filter 106
Water Separator 107
Cooling System
General 109
Coolant 109
Cooling Pack 110
Brakes
Park Brake 112
Drum
Scraper 113
Sprinkler System 114
Vibration System
General 120
Hydraulic System
General 121
Oil 121
Cylinders / Rams 123
Electrical System
General 124
Battery 124
Battery Isolator 126
Fuses 126
Relays 127

Technical Data
Static Dimensions
Dimensions 129
Weights 130
Performance Dimensions
General 131
Noise Emissions
General 132
Noise Data 132

Vibration Emissions
General 133
Vibration Data 133
Fluids, Lubricants and Capacities
General 135
Fuel 135
Coolant 139
Torque Values
General 141
Electrical System
General 142
Fuses 142
Relays 145
Engine
General 147
Declaration of Conformity
General 148
Data 149
Warranty Information
Service Record Sheet 151

Acronyms Glossary

CECE	Committee for European Construction Equipment
CESAR	Construction Equipment Security and Registration
ESOS	Engine Shut-Off Solenoid
FEAD	Front End Accessory Drive
ISO	International Organization for Standardization
LED	Light Emitting Diode
MECU	Machine Electronic Control Unit
PIN	Product Identification Number
RMS	Root Mean Square
ROPS	Roll-Over Protective Structure
RPM	Revolutions Per Minute

Introduction
About this Manual

Using the Manual

The quick start guide supplied with the machine does not replace the operator's manual. You must read all the disclaimers and safety instructions in the operator's manual before initially operating the machine.

This operator's manual is arranged to give you a good understanding of the machine and its safe operation. It also contains maintenance and technical data.

Read this manual from the front to the back before you use the machine for the first time, even if you have used machines of a similar/same type before as the technical specification, systems and controls of the machine may have changed. Particular attention must be given to all the safety aspects of operating and maintaining the machine.

If there is anything you are not sure about, ask your JCB dealer or employer. Do not guess, you or others could be killed or seriously injured.

The general and specific warnings in this section are repeated throughout the manual. Read all the safety statements regularly, so you do not forget them. Remember that the best operators are the safest operators.

The illustrations in this manual are for guidance only. Where the machines are different, the text and or the illustration will specify.

The manufacturer's policy is one of continuous improvement. The right to change the specification of the machine without notice is reserved. No responsibility will be accepted for discrepancies which may occur between specifications of the machine and the descriptions contained in this manual.

All of the optional equipment included in this manual may not be available in all territories

Left-Hand Side, Right-Hand Side

In this manual, 'left' and 'right' mean your left and right when you are seated correctly in the machine.

Figure 1.

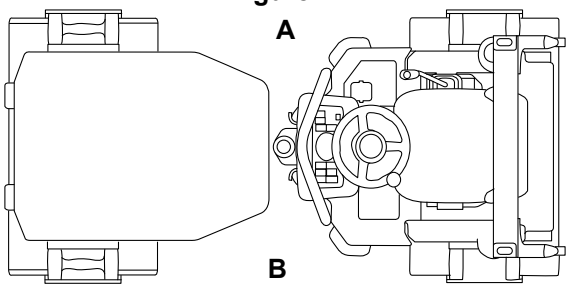

A Right **B** Left

Cab/Canopy

This manual frequently makes references to the cab. For example, 'do not operate the machine without an operator's manual in the cab'. These statements also apply to canopy build machines.

Cross References

In this manual, cross references are made by presenting the subject title in blue (electronic copy only). The number of the page upon which the subject begins is indicated within the brackets. For example: Refer to: Cross References (Page 1).

Safety

Safety - Yours and Others

All machinery can be hazardous. When a machine is correctly operated and maintained, it is a safe machine to work with. When it is carelessly operated or poorly maintained it can become a danger to you (the operator) and others.

In this manual and on the machine you will find warning messages, you must read and understand them. They inform you of potential hazards and how to avoid them. If you do not fully understand the warning messages, ask your employer or JCB dealer to explain them.

Safety is not just a matter of responding to the warnings. All the time you are working on or with the machine you must be thinking of what hazards there might be and how to avoid them.

Do not work with the machine until you are sure that you can control it.

Do not start any work until you are sure that you and those around you will be safe.

If you are not sure of anything, about the machine or the work, ask someone who knows. Do not assume anything.

Remember:

- Be careful
- Be alert
- Be safe.

Safety Warnings

In this manual there are safety notices. Each notice starts with a signal word. The signal word meanings are given below.

The signal word 'DANGER' indicates a hazardous situation which, if not avoided, will result in death or serious injury.

The signal word 'WARNING' indicates a hazardous situation which, if not avoided, could result in death or serious injury.

The signal word 'CAUTION' indicates a hazardous situation which, if not avoided, could result in minor or moderate injury.

The signal word 'Notice' indicates a hazardous situation which, if not avoided, could result in machine damage.

The safety alert system symbol (shown) also helps to identify important safety messages in this manual. When you see this symbol your safety is involved, carefully read the message that follows.

Figure 2. The safety alert system symbol



General Safety

Training

To operate the machine safely you must know the machine and have the skill to use it. You must abide by all relevant laws, health and safety regulations that apply to the country you are operating in. The operator's manual instructs you on the machine, its controls and its safe operation; it is not a training manual. Ensure that you receive the correct training before operating any machinery. Failing to do so will result in incorrect operation of the machine and you will be putting yourself and others at risk. In some markets, and for work on certain jobsites, you may be required to have been trained and assessed in accordance with an operator competence scheme. Make sure that you and your machine comply with relevant local laws and jobsite requirements – it is your responsibility.

Care and Alertness

All the time you are working with or on the machine, take care and stay alert. Always be careful. Always be alert for hazards.

Clothing

You can be injured if you do not wear the correct clothing. Loose clothing can get caught in the machinery. Keep cuffs fastened. Do not wear a necktie or scarf. Keep long hair restrained. Remove rings, watches and personal jewellery.

Alcohol and Drugs

It is extremely dangerous to operate machinery when under the influence of alcohol or drugs. Do not consume alcoholic drinks or take drugs before or while operating the machine or attachments. Be aware of medicines which can cause drowsiness.

Feeling Unwell

Do not attempt to operate the machine if you are feeling unwell. By doing so you could be a danger to yourself and those you work with.

Mobile Phones

Switch off your mobile phone before entering an area with a potentially explosive atmosphere. Sparks in such an area could cause an explosion or fire resulting in death or serious injury.

Switch off and do not use your mobile phone when refuelling the machine.

Lifting Equipment

You can be injured if you use incorrect or faulty lifting equipment. You must identify the weight of the item to be lifted then choose lifting equipment that is strong enough and suitable for the job. Make sure that lifting equipment is in good condition and complies with all local regulations.

Raised Equipment

Never walk or work under raised equipment unless it is supported by a mechanical device. Equipment which is supported only by a hydraulic device can drop and injure you if the hydraulic system fails or if the control is operated (even with the engine stopped).

Make sure that no-one goes near the machine while you install or remove the mechanical device.

Raised Machine

Never position yourself or any part of your body under a raised machine which is not correctly supported. If the machine moves unexpectedly you could become trapped and suffer serious injury or be killed.

Lightning

Lightning can kill you. Do not use the machine if there is lightning in your area.

Machine Modifications

This machine is manufactured in compliance with prevailing legislative requirements. It must not be altered in any way which could affect or invalidate its compliance. For advice consult your JCB dealer.

Clothing and Personal Protective Equipment (PPE)

Do not wear loose clothing or jewellery that can get caught on controls or moving parts. Wear protective clothing and personal safety equipment issued or called for by the job conditions, local regulations or as specified by your employer.

About the Product
Introduction

General

Before you start using the machine, you must know how the machine operates. Use this part of the manual to identify each control lever, switch, gauge, button and pedal. Do not guess, if there is anything you do not understand, ask your JCB dealer.

Name and Address of the Manufacturer

JCB India Limited, Heavyline - India Business Unit, Talegaon, Pune - 410507, India.

Product Compliance

Your JCB product was designed to comply with the laws and regulations applicable at the time of its manufacture for the market in which it was first sold. In many markets, laws and regulations exist that require the owner to maintain the product at a level of compliance relevant to the product when first produced. Even in the absence of defined requirements for the product owner, JCB recommend that the product compliance be maintained to ensure safety of the operator and exposed persons and to ensure the correct environmental performance. Your product must not be altered in any way which could affect or invalidate any of these requirements. For advice consult your JCB dealer.

For its compliance as a new product, your JCB and some of its components may bear approval numbers and markings, and may have been supplied with a Declaration/Certificate of Conformity. These markings and documents are relevant only for the country/region in which the product was first sold to the extent that the laws and regulations required them.

Re-sales and import/export of products across territories with different laws and regulations can cause new requirements to become relevant for which the product was not originally designed or specified. In some cases, pre owned products irrespective of their age are considered new for the purposes of compliance and may be required to meet the latest requirements which could present an insurmountable barrier to their sale/use.

Despite the presence of any compliance related markings on the product and components, you should not assume that compliance in a new market will be possible. In many cases it is the person responsible for import of a pre owned product into a market that becomes responsible for compliance and who is also considered the manufacturer.

JCB may be unable to support any product compliance related enquiry for a product which has been moved out of the legislative country/region where it was first sold, and in particular where a product specification change or additional certification would have been required in order for the product to be in compliance.

Description

General

The JCB Tandem roller machine is a self-propelled, vibratory tandem drum rollers which is powered by a 3 cylinder, diesel engine.

The machine is designed for compacting soil types ranging from stones to silty sand, or asphalt construction materials when rolling over the subgrade in a forward or reverse direction (with or without vibration).

Four scrapers (two on each drum) are mounted on the machine and sprinkler bars are fitted to the front and rear drums. The spray nozzles and the bar end caps are removable for easy cleaning.

The hydrostatic drive system allows for infinitely variable travel speeds. The drive motors (one motor mounted on the left side of each drum) are connected in series on the CT160 and parallel on the CT260. The machines is always driven with all drum drive. Each motor incorporates a spring on, pressure off brake system which engages when the machine is in neutral. The drive motor hoses are protected inside steel frame plates.

A hydraulic system is also used to turn the machine front and rear vibratory shafts. Designed with an overturning weight system on the vibratory shafts, the machine has selectable front drum, rear drum or both drums vibration. The machine operates at a vibratory frequency of between 50 and 66 Hz and a nominal amplitude of 0.5 mm.

The machine has an articulated steering system giving a tight turning radius.

Intended Use

The machine is intended to be used in normal environmental conditions as described in this manual. Normally the machine is designed only for compacting beds of earth or bituminous construction when running over the subgrade in the forward or reverse direction, with or without vibration. These compacting material include soil types ranging from stones to silty sand,and having water contents ranging from 40% to 110% of the optimum water content. These figures are in accordance to the standard Proctor test DIN 18127.

Application also include road and pavement construction, sub-soil compaction and similar applications.

Soil of fine-grained or soils having higher water contents require a qualified trial compaction.

Use for which it is not intended includes, in particular:

- It is not permissible to drive on a high gradient which is greater than the permissible gradient of the machine.
- Before driving on a gradient, it is still necessary to check, at the start of the gradient as seen in the intended driving direction, whether there is adequate frictional engagement between the drums and the roadway, i.e. whether, on the gradient, the machine can be driven uphill with medium acceleration and can be braked downhill.
- It is not permissible to drive on a gradient if the drums skid during braking.
- Vibration at standstill.
- Vibrating travel on blocks, rocks, concrete or frozen soil.
- Vibrating travel in the vicinity of buildings if this could damage parts or installations; This should normally be assumed for vibrational speeds of 8 mm/s or more at the endangered parts.
- Earth-moving during forward driving with the pusher blade lowered.
- Operation in extraordinary applications (see below) without additional safety measures.
- Driving from above onto an untested gradient.
- Driving on a subgrade having a gradient greater than the permissible gradient in a direction other than the incline direction.
- Use of the roller other than from the operator's seat.

The machine is intended to be used only on a subgrade gradient up to the permissible gradient. Refer to: Slopes (Page 48). Refer to: Performance Dimensions (Page 131).

Extraordinary applications are, in particular:

- Work on a subgrade having a gradient greater than the permissible gradient.
- Work on the edges of hillsides or trenches.
- Work in regions having continuous construction site traffic.

Additional safety measures can be:

- Securing by means of ropes attached to winches or accompanying heavy construction vehicles.
- Adequate escape lanes.
- Appointment of guides.
- Testing the function of the brakes when first driving onto the gradient at the lower end of the gradient
- Correspondingly: testing the directional stability of the longitudinal axis of the roller when switching on the vibration.

The manufacturer/supplier is not liable for damage resulting from such use. The user alone bears the risk.

If the machine is to be used in applications where there is a high silica concentration, risk due to materials containing asbestos or similar environment based hazards, additional protective measures such as the use of PPE may be required.

The machine should not be operated by any person who does not have an appropriate level of qualification, training or experience of use of this type of machine.

Prior to use of the machine, its suitability (size, performance, specification etc.) should be considered with regards to the intended application and any relevant hazards that may exist. Contact your JCB dealer for support in determining the appropriate JCB machine, attachment and any optional equipment that is suitable for the application and environment.

It is also intended that the instruction manual is observed and that the servicing and maintenance regulations are followed.

Danger Zone

The danger zone is any zone within and/or around the machinery in which a person is subject to a risk to their health or safety. During operation of the machine, keep all persons out of the danger zone. Persons in the danger zone could be injured.

Before you do a maintenance task, make the product safe. Refer to: Maintenance Positions (Page 87).

Main Component Locations

Figure 3.

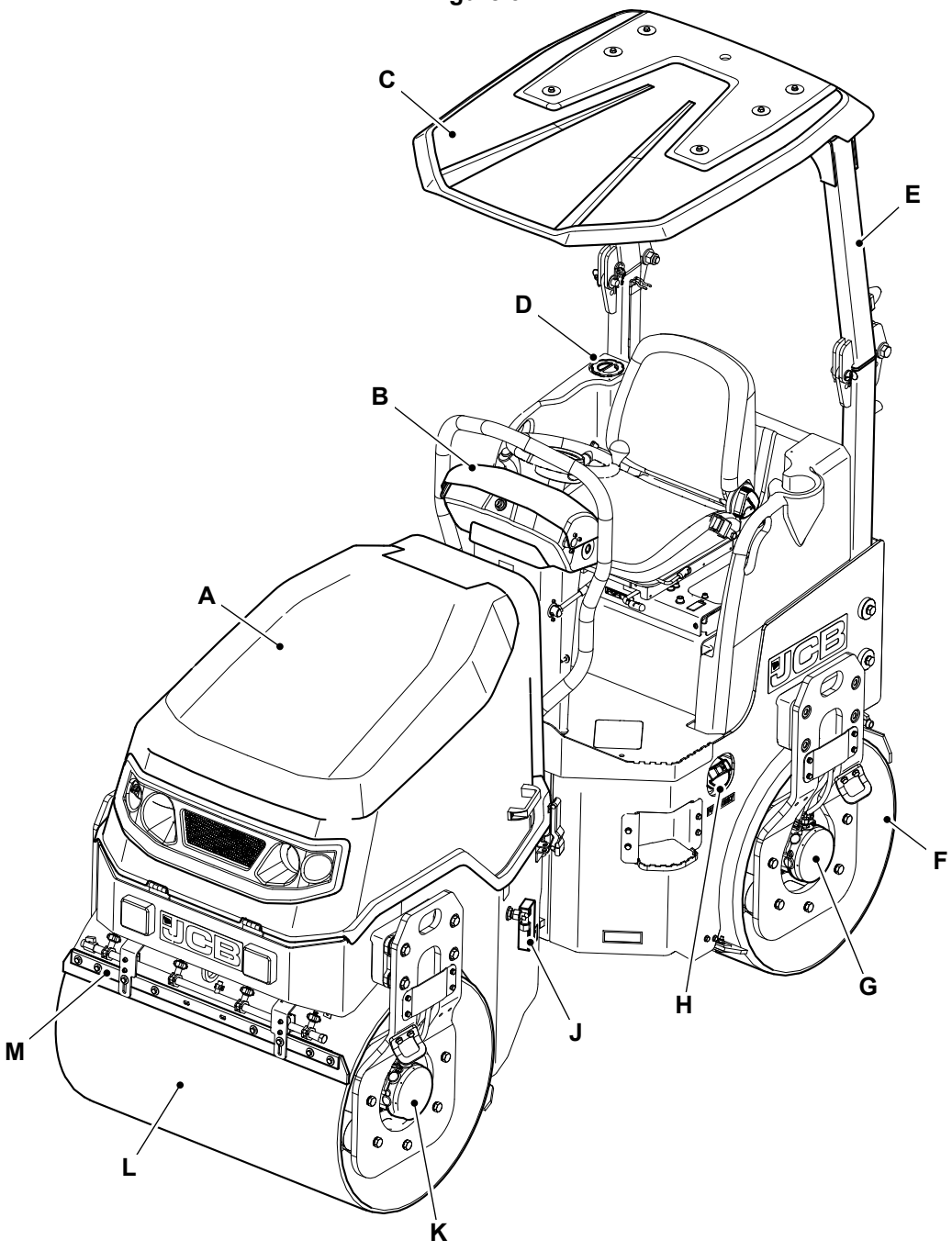

A Engine compartment cover
B Instrument panel and switches
C Sunroof
D Water tank filler cap
E ROPS (Roll-Over Protective Structure)
F Smooth drum (rear)
G Drum drive motor (rear)
H Fuel filler cap
J Hydraulic tank oil indicator
K Drum drive motor (front)
L Smooth drum (front)
M Scraper

Product and Component Identification

Machine

Your machine has an identification plate. The PIN (Product Identification Number), weight, engine power, year of manufacture and serial number of the machine are shown on the identification plate. The identification plate can be found on the front face of the seat platform.

Figure 4.

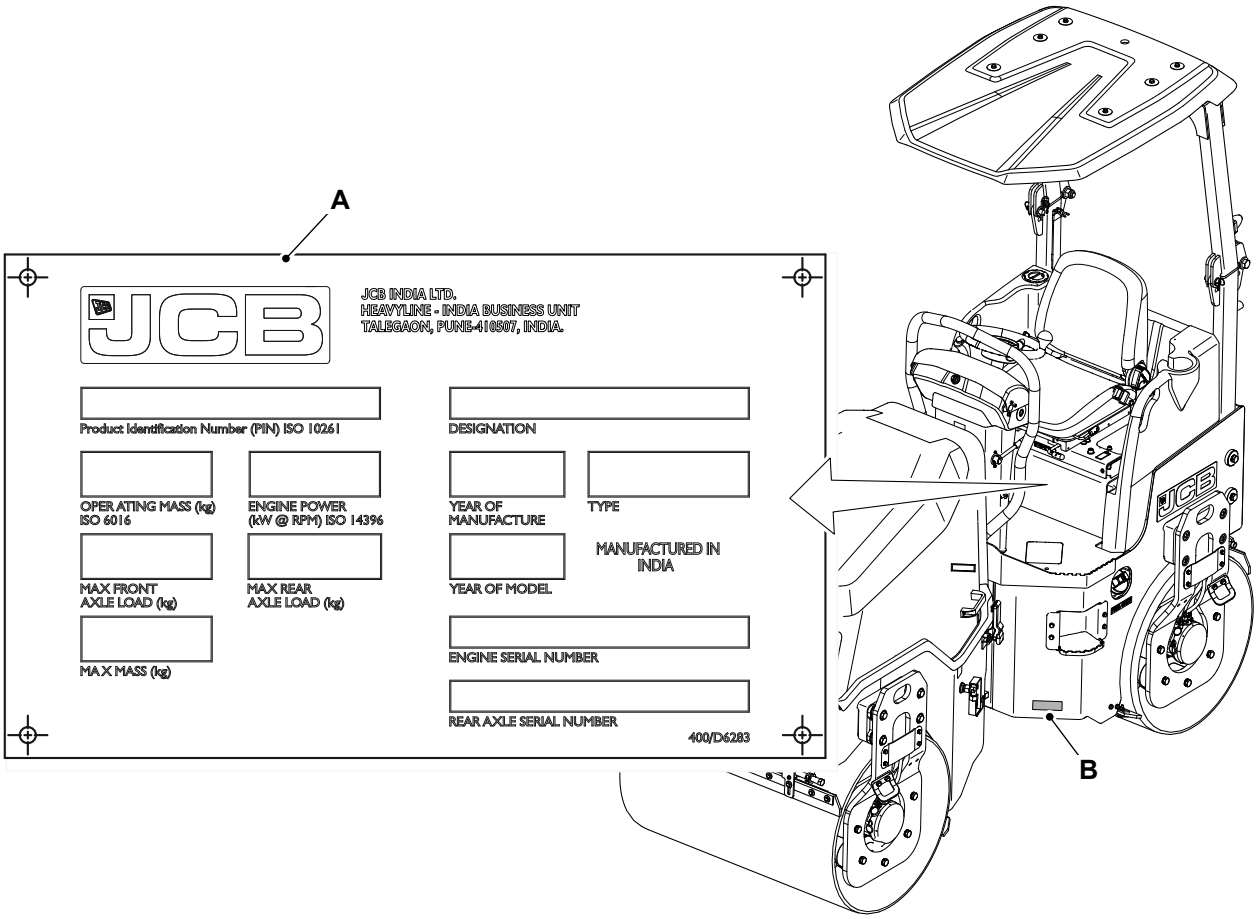

A Machine data plate

B Stamped PIN

The machine model and build specification are indicated by the PIN. The PIN has 17 digits and must be read from left to right.

Table 1. Typical PIN

PUN	JT260	J	H	2556351

Table 2. Explanation of the PIN

Digit	Description
1 to 3	World manufacturer identification. For example, PUN = Pune Build.
4 to 8	Machine type and model. For example, JT260=CT260.
9	Random check letter. The check letter is used to verify the authenticity of a machine's PIN.
10	Year of manufacture. For example, H = 2018.
11 to 17	Machine serial number.

Engine

The engine serial number is stamped on the cylinder block. Refer to Figure 5.

The engine data label and emission label are located on the engine top cover. Refer to Figure 5.

Figure 5.

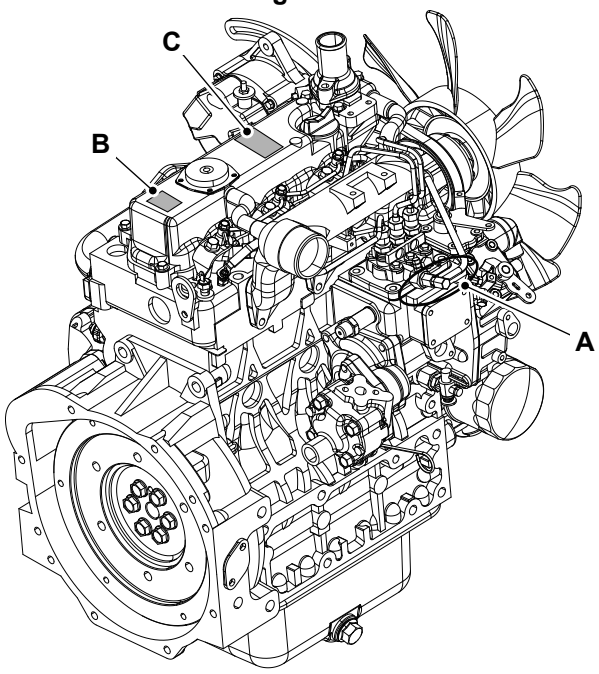

A Stamped engine serial number
B Engine data label
C Engine emission label

Operator Protective Structure

⚠ **WARNING** You could be killed or seriously injured if you operate a machine with a damaged or missing ROPS. If the ROPS has been in an accident, do not use the machine until the structure has been renewed. Modifications and repairs that are not approved by the manufacturer may be dangerous and will invalidate the ROPS.

WARNING Do not operate the machine with the ROPS in the folded position except while working within a building or orchard where vertical space is limited. Take extreme care when operating the machine with the ROPS in the folded position. Make sure that the ROPS is unfolded after completion of the work.

Machine built to the ROPS (Roll-Over Protective Structure) standard and has data plate attached to lower left side of ROPS frame.

Figure 6.

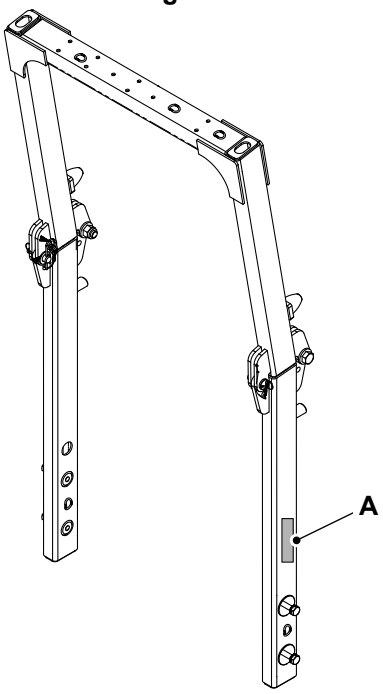

A Data plate

Figure 7. Typical Data Plate

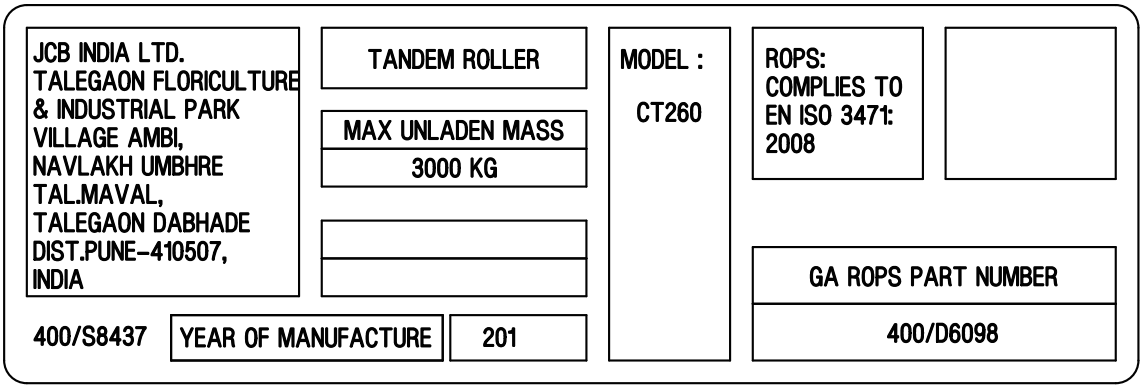

Safety Labels

General

⚠ **WARNING** Safety labels on the machine warn you of particular hazards. You can be injured if you do not obey the safety instructions shown.

The safety labels are strategically placed around the machine to remind you of possible hazards.

If you need eye-glasses for reading, make sure you wear them when reading the safety labels. Do not over-stretch or put yourself in dangerous positions to read the safety labels. If you do not understand the hazard shown on the safety label, then refer to Safety Label Identification.

Keep all of the safety labels clean and readable. Replace a lost or damaged safety label. Make sure the replacement parts include the safety labels where necessary. Each safety label has a part number printed on it, use this number to order a new safety label from your JCB dealer.

Safety Label Identification

Figure 8.

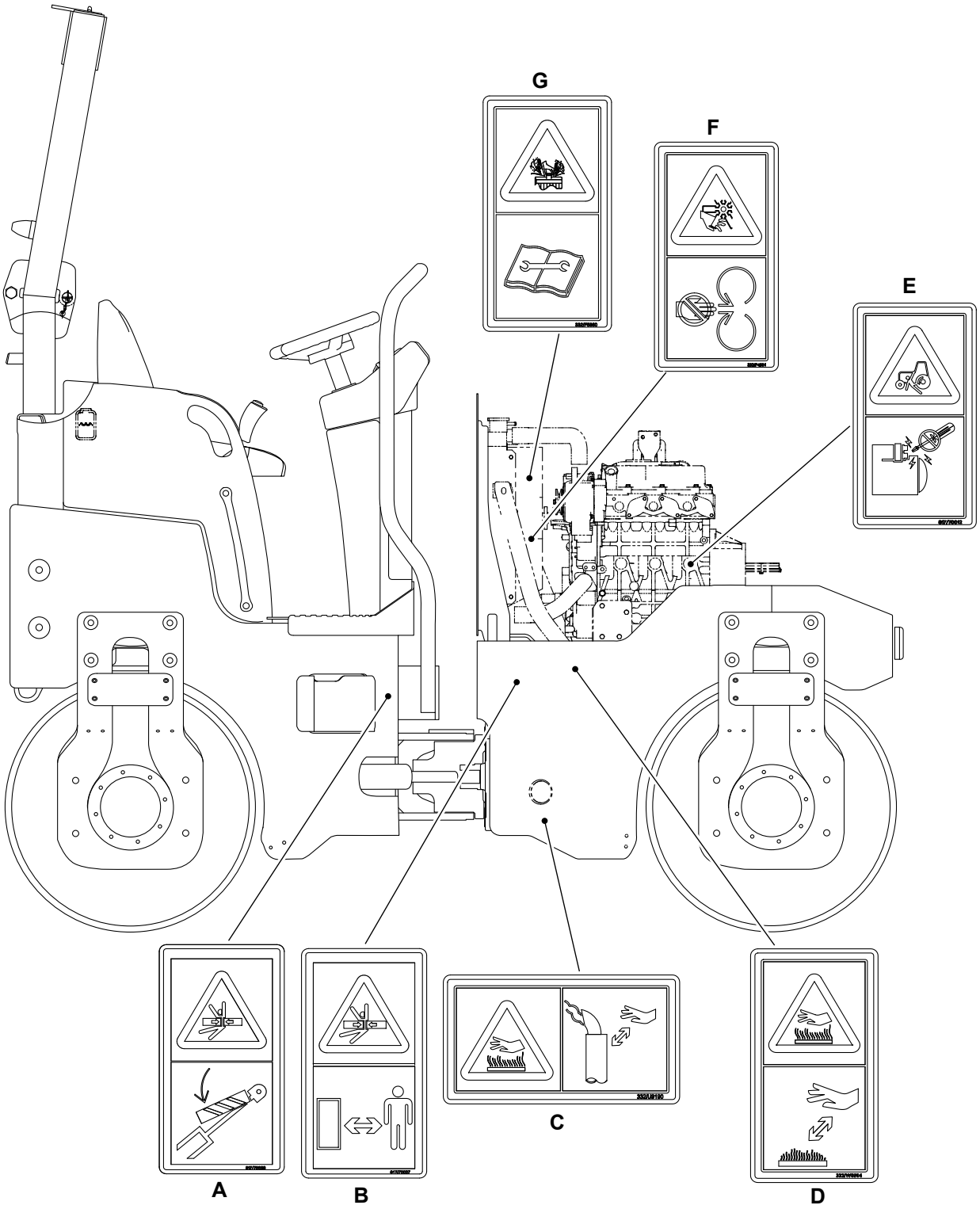

Figure 9.

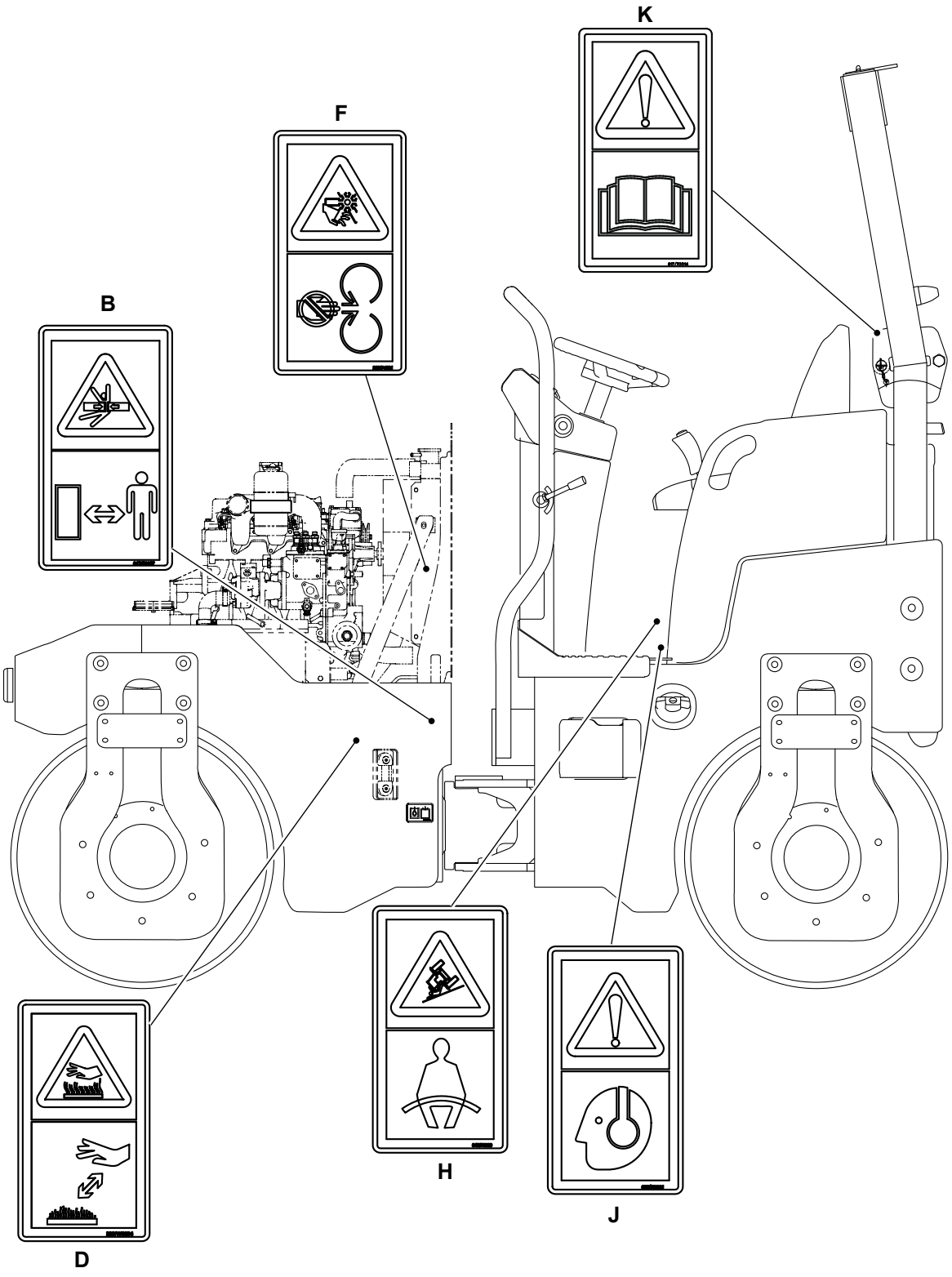

Table 3. Safety Labels

Item	Part No.	Description	Qty.
A	817/70028	Crushing of whole body. Insert the articulated frame lock during maintenance and shipping.	1

Item	Part No.	Description	Qty.
B	817/70027	Warning. Crushing of whole body. Keep a safe distance.	2
C	332/U9190	Warning. Engine exhaust. Burn to fingers and hands. Stay a safe distance away.	1
D	332/W8904	Burns to fingers and hands. Stay a safe distance away.	2
E	817/70012	Run over hazard. Start the engine from the operator's seat only. Do not short across the terminals.	1
F	332/P4581	Warning. Severing of hands and fingers. Keep clear of/do not reach into rotating parts.	2
G	332/F5860	Warning. Hot fluid under pressure. Read the Operator's Manual.	1
H	817/70029	Warning. Crush hazard. Wear seat belt.	1
J	817/70021	Noise warning. Wear ear protection.	1
K	817/70014	Warning. Read the Operator’s Manual before you operate the machine.	1

Operator Station

Component Locations

Figure 10.

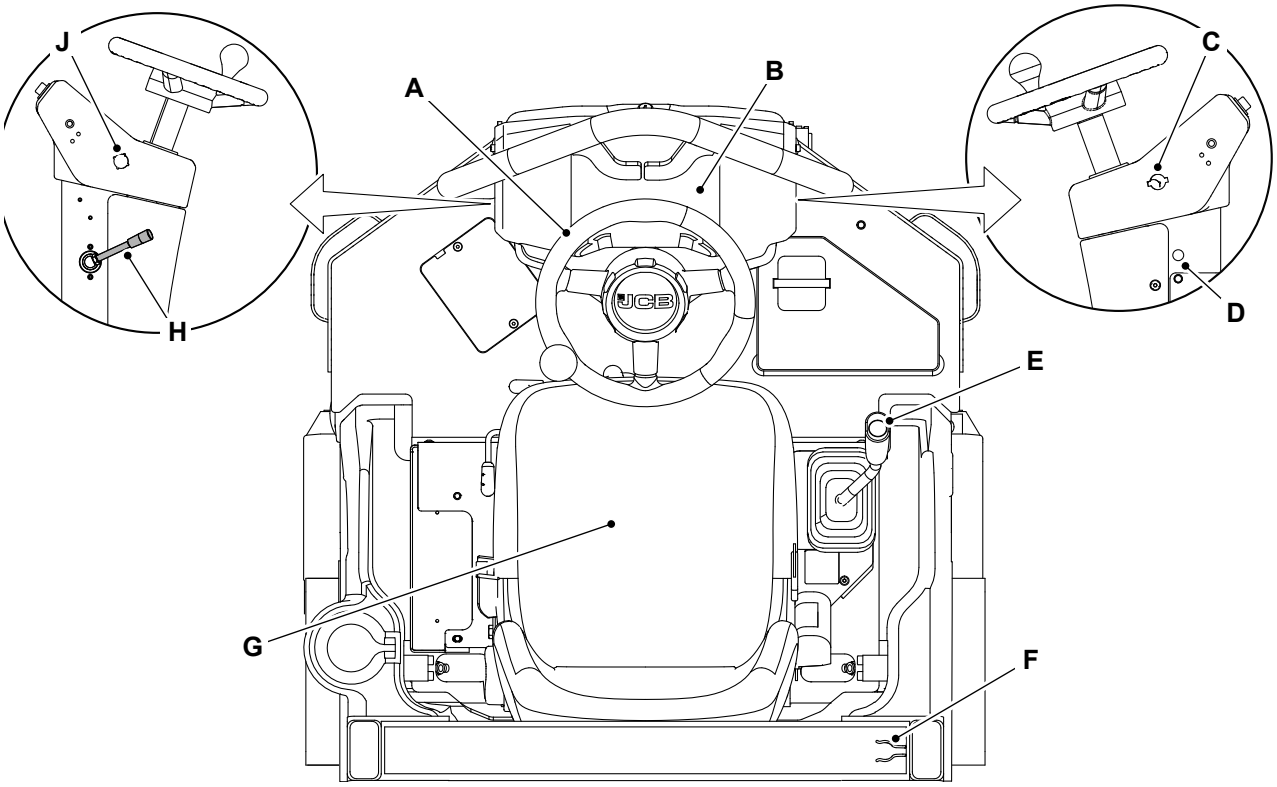

A Steering wheel Refer to: Steering Wheel (Page 43).
B Front console switches and instrument panel Refer to: Console Switches (Page 18).
C Ignition switch Refer to: Ignition Switch (Page 17).
D Auxiliary power socket Refer to: Auxiliary Power Socket (Page 52).
E Drive lever Refer to: Transmission Drive Lever (Page 43).
F Fire extinguisher mounting bracket Refer to: Fire Extinguisher (Page 53).
G Operator seat Refer to: Operator Seat (Page 32).
H Hand throttle control Refer to: Hand Throttle Control (Page 43).
J Emergency stop button Refer to: Stopping and Parking (Page 39).

Interior Switches

Ignition Switch

⚠ **Notice:** Do not operate the starter motor for more than 20 s at one time. Let the starter motor cool for at least 2 min.

The ignition key operates the three-position ignition switch. The ignition key can only be inserted or removed in position 0.

If the engine fails to start, the ignition key must be returned to position 0 before the starter motor is re-engaged.

If the engine fires but does not fully start, let the starter motor cool for at least 2 min between.

Figure 11.

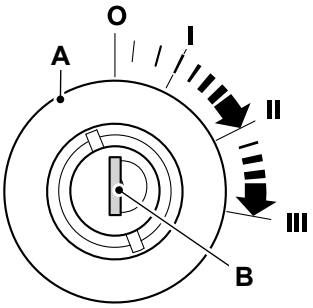

A Ignition switch **B** Ignition key

Table 4. Switch Positions

Position	Function
0	Off/Stop the Engine: Turn the ignition key to this position to stop the engine. Make sure the controls are in neutral and the excavator and dozer are lowered before you stop the engine.
I	On: Turn the ignition key to this position to connect the battery to all of the electrical circuits. The ignition key will return to this position when it is released from position II or position III.
II	Heat position. Turn the ignition key to this position to operate the glow plug or grid heater for the appropriate time.
III	Start: Turn the ignition key to this position to operate the starter motor and turn the engine. The ignition switch has an inhibitor to stop the ignition switch being turned ON when the engine is running.

Console Switches

General

The installed switches and their positions can change according to the specification of the machine.

Each switch has a graphic symbol to show the function of the switch. Before you operate a switch, make sure that you understand its function.

The rocker switches have two or three positions (as shown).

If the switch has a backlight, then the graphic symbol illuminates when the ignition switch or side lights are in the on position.

The light bar illuminates to show that the switch function is active.

Figure 12.

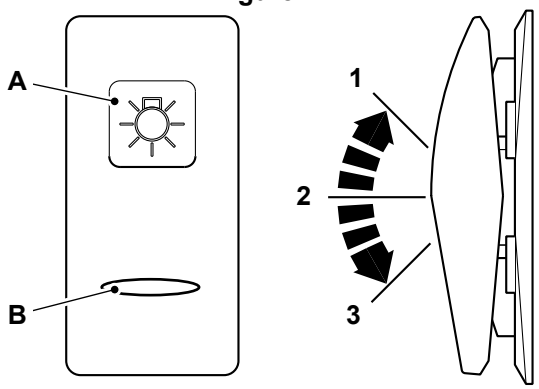

A Graphic symbol

B Light bar

Road Lights

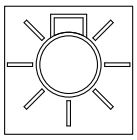

Two position rocker switch. The switch functions to operate when the ignition is in the on position.
Position : 1 = Off
Position : 2 = Headlights, rear tail lights and front work lights are on.

Direction Indicators

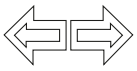

Three position rocker switch. The switch functions operate when the ignition switch is in the on or off position.
Position : 1 = Left turn indicators
Position : 2 = Off
Position : 3 = Right turn indicators.

Hazard Warning Lights



Two position rocker switch. The switch functions operate when the ignition switch is in the on and off positions.
Position : 1 = Off
Position : 2 = On. A light on the instrument panel flashes with the outside lights.

Front Work Lights



Two position rocker switch. The switch functions operate when the ignition switch is in the on position.
Position : 1 = Off
Position : 2 = Front work light on (LED work light option).

Rear Work Lights

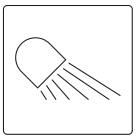

Two position rocker switch. The switch functions operate when the ignition switch is in the on position.
Position **1**: Off
Position **2**: Rear work light on (standard and LED option).

Horn

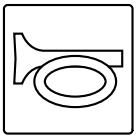

Spring loaded rocker switch. Press switch to operate the horn.
Position **1**: On

Beacon

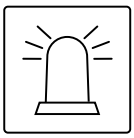

Two position rocker switch. The switch functions operate when the ignition switch is in the on and off positions.
Position : 1 = Off
Position : 2 = Beacon on

Automatic Vibration



Three position rocker switch. The switch functions operate when the ignition switch is in the on position.
Position : 1 = Auto
Position : 2 = Off
Position : 3 = Manual

Front Vibration

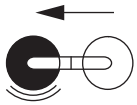

Two position rocker switch. The switch functions operate when the ignition switch is in the on position.
Position **1**: Off
Position **2**: Front vibration on.

Rear Vibration

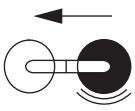

Two position rocker switch. The switch functions operate when the ignition switch is in the on position.
Position **1**: Off
Position **2**: Rear vibration on.

Notes:

Operation
Introduction

General

The aim of this part of the manual is to guide the operator step-by-step through the task of learning how to operate the machine efficiently and safely. Read the Operation section through from beginning to end.

The operator must always be aware of events happening in or around the machine. Safety must always be the most important factor when you operate the machine.

When you understand the operating controls, gauges and switches, practice using them. Drive the machine in an open space, clear of people. Get to know the 'feel' of the machine and its driving controls.

Do not rush the job of learning, make sure you fully understand everything in the Operation section. Take your time and work efficiently and safely.

Remember:

- Be careful.
- Be alert.
- Be safe.

Operating Safety

General

Training

Make sure that you have had adequate training and that you are confident in your ability to operate the machine safely before you use it. Practice using the machine and its attachments until you are completely familiar with the controls and what they do. With a careful, well trained and experienced operator, your machine is a safe and efficient machine. With an inexperienced or careless operator, it can be dangerous. Do not put your life, or the lives of others, at risk by using the machine irresponsibly. Before you start to work, tell your colleagues what you will be doing and where you will be working. On a busy site, use a signalman. Before doing any job not covered in this manual, find out the correct procedure. Your local JCB distributor will be glad to advise you.

Fuel

Fuel is flammable, keep naked flames away from the fuel system. Stop the engine immediately if a fuel leak is suspected. Do not smoke while refuelling or working on the fuel system. Do not refuel with the engine running. Completely wipe off any spilt fuel which could cause a fire. There could be a fire and injury if you do not follow these precautions.

Machine Condition

A defective machine can injure you or others. Do not operate a machine which is defective or has missing parts. Make sure the maintenance procedures in this manual are completed before using the machine.

Machine Limits

Operating the machine beyond its design limits can damage the machine, it can also be dangerous. Do not operate the machine outside its limits. Do not try to upgrade the machine performance with unapproved modifications or additional equipment.

Engine/Steering Failure

If the engine or steering fails, stop the machine as quickly as possible. Do not operate the machine until the fault has been corrected.

Exhaust Gases

Machine exhaust gases can harm and possibly kill you or bystanders if they are inhaled. Do not operate the machine in closed spaces without making sure there is good ventilation. If possible, install an exhaust extractor. If you begin to feel drowsy, stop the machine at once and get into fresh air.

Worksites

Worksites can be hazardous. Examine the site before working on it. You could be killed or injured if the ground gives way under your machine or if piled material collapses onto it. Check for potholes and hidden debris, logs, ironwork etc. Any of these could cause you to lose control of your machine. Check for utilities such as electric cables (overhead and underground), gas and water pipes etc. Mark the positions of the underground cables and pipes. Make sure that you have enough clearance beneath overhead cables and structures.

Communications

Bad communications can cause accidents. Keep people around you informed of what you will be doing. If you will be working with other people, make sure any hand signals that may be used are understood by everybody. Worksites can be noisy, do not rely on spoken commands.

Parking

An incorrectly parked machine can move without an operator. Follow the instructions in the Operator's Manual to park the machine correctly.

Banks and Trenches

Banked material and trenches can collapse. Do not work or drive too close to banks and trenches where there is danger of collapse.

Safety Barriers

Unguarded machines in public places can be dangerous. In public places, or where your visibility is reduced, place barriers around the work area to keep people away.

Sparks

Explosions and fire can be caused by sparks from the exhaust or the electrical system. Do not use the machine in closed areas where there is flammable material, vapour or dust.

Hazardous Atmospheres

This machine is designed for use in normal out door atmospheric conditions. It must not be used in an enclosed area without adequate ventilation. Do not use the machine in a potentially explosive atmosphere, i.e. combustible vapours, gas or dust, without first consulting your JCB dealer.

Regulations

Obey all laws, worksite and local regulations which affect you and your machine.

Electrical Power Cables

You could be electrocuted or badly burned if you get the machine or its attachments too close to electrical power cables. You are strongly advised to make sure that the safety arrangements on site comply with the local laws and regulations concerning work near electric power lines. Before you start using the machine, check with your electricity supplier if there are any buried power cables on the site. There is a minimum clearance required for working beneath overhead power cables. You must obtain details from your local electricity supplier.

Working Platform

Using the machine as a working platform is hazardous. You can fall off and be killed or injured. Never use the machine as a working platform unless with approved man-basket or man-crate (if applicable).

Machine Safety

Stop work at once if a fault develops. Abnormal sounds and smells can be signs of trouble. Examine and repair before resuming work.

Hot Components

Touching hot surfaces can burn skin. The engine and machine components will be hot after the unit has been running. Allow the engine and components to cool before servicing the unit.

Travelling at High Speeds

Travelling at high speeds can cause accidents. Always travel at a safe speed to suit working conditions.

Hillsides

Operating the machine on hillsides can be dangerous if the correct precautions are not taken. Ground conditions can be changed by rain, snow, ice etc. Check the site carefully. When applicable, keep all attachments low to the ground.

Visibility

Accidents can be caused by working in poor visibility. Use your lights to improve visibility. Keep the road lights, windows, mirrors and cameras clean (when fitted). Do not operate the machine if you cannot see clearly. Modification of the machine's configuration by the user (e.g. the fitting of large and non-approved attachments) may result in a restriction of the machine visibility.

Hands and Feet

Keep your hands and feet inside the machine. When using the machine, keep your hands and feet clear of moving parts. Keep your hands and feet within the operator compartment while the vehicle is in motion.

Controls

You or others can be killed or seriously injured if you operate the control levers from outside the machine. Operate the control levers only when you are correctly seated.

Passengers

Passengers in or on the machine can cause accidents. Do not carry passengers.

Fires

If your machine is equipped with a fire extinguisher, make sure it is checked regularly. Keep it in the correct machine location until you need to use it. Do not use water to put out a machine fire, you could spread an oil fire or get a shock from an electrical fire. Use carbon dioxide, dry chemical or foam extinguishers. Contact your nearest fire department as quickly as possible.

Roll Over Protection

If the machine starts to roll over, you can be crushed if you try to leave the cab. If the machine starts to roll over, do not try and jump from the cab. Stay in the cab, with your seat belt fastened.

Confined Areas

Pay extra attention to proximity hazards when operating in confined areas. Proximity hazards include buildings, traffic and bystanders.

Safe Working Loads

Overloading the machine can damage it and make it unstable. Study the specifications in the Operator's Manual before using the machine.

Lightning

If you are inside the machine during a lightning storm stay in the machine until the storm has passed. If you are outside of the machine during a lightning storm stay away from the machine until the storm has passed. Do not attempt to mount or enter the machine. If the machine is struck by lightning do not use the machine until it has been checked for damage and malfunction by trained personnel.

Worksite Safety

⚠ **WARNING** You or others can be killed or seriously injured if you do unfamiliar operations without first practising them. Practise away from the worksite on a clear area. Keep other people away. Do not perform new operations until you are sure you can do them safely.

WARNING There could be dangerous materials such as asbestos, poisonous chemicals or other harmful substances buried on the site. If you uncover any containers or you see any signs of toxic waste, stop the machine and advise the site manager immediately.

WARNING Before you start using the machine, check with your local gas company if there are any buried gas pipes on the site.

If there are buried gas pipes we recommend that you ask the gas company for any specific advice regarding the way you must work on the site.

Some modern gas pipes cannot be detected by metal detectors, so it is essential that an accurate map of buried gas pipes is obtained before any excavation work commences.

Hand dig trial holes to obtain precise pipe locations. Any cast iron pipes found must be assumed to be gas pipes until contrary evidence is obtained.

Older gas pipes can be damaged by heavy vehicles driving over the ground above them.

Leaking gas is highly explosive.

If a gas leak is suspected, contact the local gas company immediately and warn all personnel on the site. Ban smoking, make sure that all naked lights are extinguished and switch off any engines which may be running.

You are strongly advised to make sure that the safety arrangements on site comply with the local laws and regulations concerning work near buried gas pipes.

CAUTION Before you start using the machine, check with your local public water supplier if there are buried pipes and drains on the site. If there are, obtain a map of their locations and follow the advice given by the water supplier.

You are strongly advised to make sure that the safety arrangements on site comply with the local laws and regulations concerning work near buried pipes and drains.

CAUTION If you cut through a fibre optic cable, Do not look into the end of it, your eyes could be permanently damaged.

An applicable worksite organisation is required in order to minimise hazards that are caused by restricted visibility. The worksite organisation is a collection of rules and procedures that coordinates the machines and people that work together in the same area. Examples of worksite organisation include:

- Restricted areas
- Controlled patterns of machine movement
- A system of communication.

You and/or your company could be legally liable for any damage you may cause to public utilities. It is your responsibility to make sure that you know the locations of any public utility cables or pipes on the worksite which could be damaged by your machine.

Risk Assessment

It is the responsibility of the competent people that plan the work and operate the machine to make a judgement about the safe use of the machine, they must take into account the specific application and conditions of use at the time.

It is essential that a risk assessment of the work to be done is completed and that the operator obeys any safety precautions that the assessment identifies.

If you are unsure of the suitability of the machine for a specific task, contact your JCB dealer who will be pleased to advise you.

The following considerations are intended as suggestions of some of the factors to be taken into account when a risk assessment is made. Other factors may need to be considered.

A good risk assessment depends on the training and experience of the operator. Do not put your life or the lives of others at risk.

Personnel

- Are all persons who will take part in the operation sufficiently trained, experienced and competent? Are they fit and sufficiently rested? A sick or tired operator is a dangerous operator.

- Is supervision needed? Is the supervisor sufficiently trained and experienced?
- As well as the machine operator, are any assistants or lookouts needed?

The Machine

- Is it in good working order?
- Have any reported defects been corrected?
- Have the daily checks been carried out?
- Are the tyres still at the correct pressure and in good condition and is there sufficient fuel to complete the job (if applicable)?

Working Area

- Is it level?
- Is the ground solid? Will it support the weight of the machine when loaded?
- How rough is the ground? Are there any sharp projections which could cause damage, particularly to the tyres?
- Are there any obstacles or hazards in the area, for example, debris, excavations, manhole covers, power lines?
- Is the space sufficient for safe manoeuvring?
- Are any other machines or persons likely to be in or to enter the area while operations are in progress?

The Route to be Travelled

- How solid is the ground, will it provide sufficient traction and braking? Soft ground will affect the stability of the machine and this must be taken into account.
- How steep are any slopes, up/down/across? A cross slope is particularly hazardous, is it possible to detour to avoid them?

Weather

- How windy is it? High wind will adversely affect the stability of a loaded machine.
- Is it raining or is rain likely? The ground that was solid and smooth when dry will become uneven and slippery when wet, and it will not give the same conditions for traction, steering or braking.

Walk-Around Inspection

General

⚠ **WARNING** Walking or working under raised attachments can be hazardous. You could be crushed by the attachments or get caught in the linkages. Lower the attachments to the ground before doing these checks. Also make sure that the park brake is engaged before doing these checks.

The following checks must be made each time you return to the machine after leaving it for any period of time. We advise you also to stop the machine occasionally during long work sessions and do the checks again.

All these checks concern the serviceability of the machine. Some concern your safety. Get your service engineer to check and correct any defects.

1. Check for cleanliness.
   1.1. Clean the windows, light lenses and the rear view mirrors (where applicable).
   1.2. Remove dirt and debris, especially from around the linkages, rams, pivot points and radiator.
   1.3. Make sure the cab step and handrails are clean and dry.
   1.4. Clean all of the safety and instructional labels. Replace any label that is missing or cannot be read.
2. Check for damage.
   2.1. Examine the machine generally for damaged and missing parts.
   2.2. Make sure that the attachment is correctly attached and in good condition.
   2.3. Make sure that all of the pivot pins are correctly installed.
   2.4. Examine the windows for cracks and damage. Glass splinters can blind.
   2.5. Check for oil, fuel and coolant leakages below the machine.
3. Make sure that all of the filler caps are installed correctly.
4. Make sure that all of the access panels are closed correctly.
5. If the filler caps and access panels are installed with locks, we recommend that you lock them to prevent theft or tampering.

Entering and Leaving the Operator Station

General

⚠ **CAUTION** Entering or leaving the operator station must only be made where steps and handrails are provided. Always face the machine when entering and leaving. Make sure the steps, handrails and your boot soles are clean and dry. Do not jump from the machine. Do not use the machine controls as handholds, only use the handrails.

Operator can enter and leave the operator station from both side of the machine.

Make sure the machine is stopped and correctly parked before entering or leaving the cab. Refer to: Stopping and Parking (Page 39).

When entering and leaving the cab always maintain a three point contact with the handrails and step. Do not use the machine controls or steering wheel as handholds.

Entering the Canopy

1. Hold the two handrails, then use the steps to climb into the cab and swing yourself into the operators seat.

Figure 13.

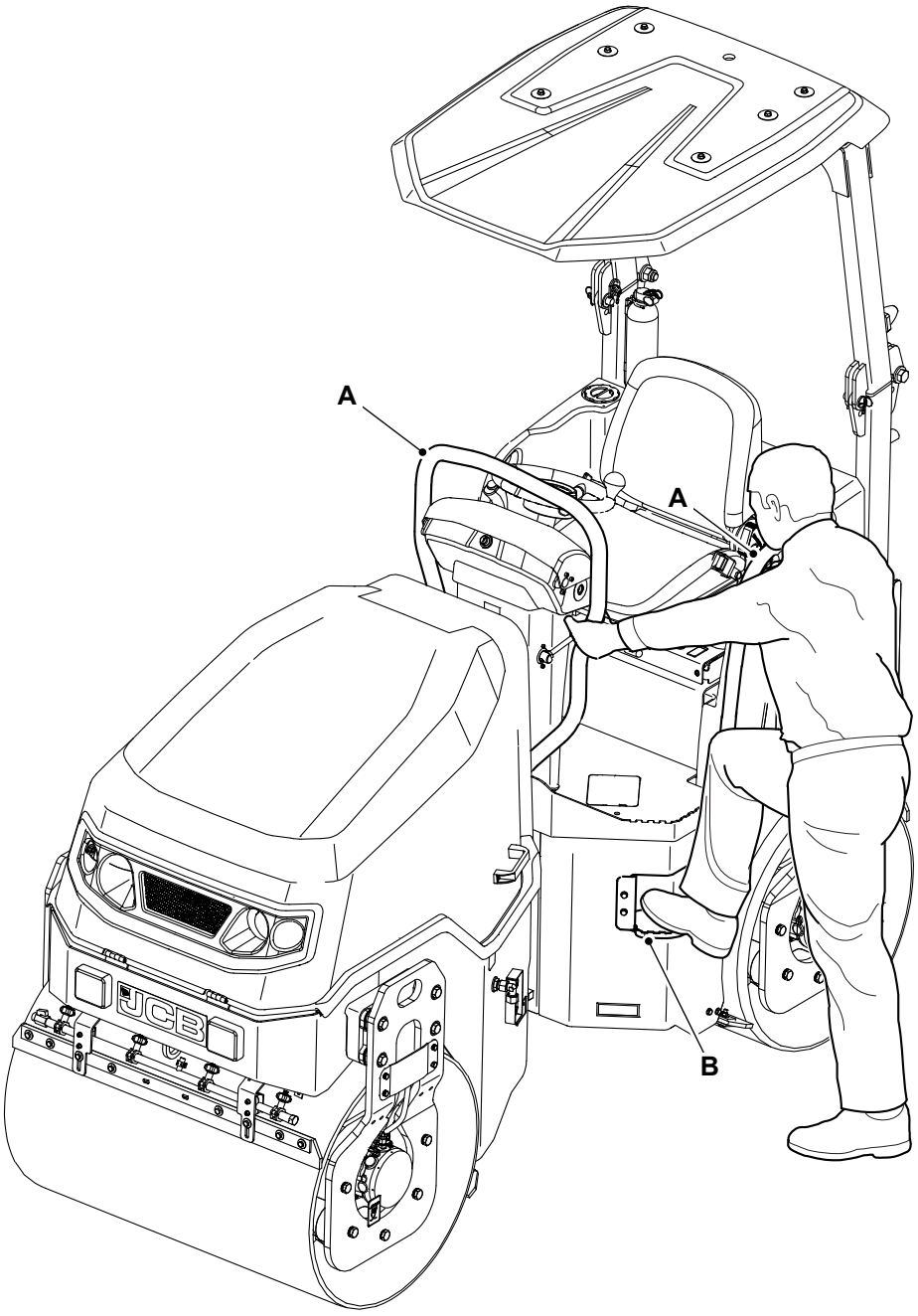

A Handrails

B Step

Leaving the Canopy

1. Park the machine on solid, level ground.
2. Stop the engine.
3. Turn the ignition key to the off position.
4. Hold both of the handrails and use the steps to climb down backwards from the cab onto the ground.

Battery Isolator

General

⚠ **Notice:** Before carrying out arc welding on the machine, disconnect the battery and alternator to protect the circuits and components. The battery must still be disconnected even if a battery isolator is installed.

Notice: Do not isolate the machine electrics when the engine is running, this may cause damage to the machine electrics.

Disconnect the Machine Electrics:

1. Turn the ignition key to the off position.
2. Get access to the battery isolator.
   Refer to: Service Points (Page 88).
3. Turn the battery isolator key in a counter-clockwise direction and remove.

Connect the Machine Electrics:

1. Make sure the ignition is switched off.
2. Insert the battery isolator key and turn in a clockwise direction.

Before Starting the Engine

General

⚠ **WARNING** When a seat belt is installed on your machine replace it with a new one if it is damaged, if the fabric is worn, or if the machine has been in an accident.

WARNING Operating the machine without a seat belt can be dangerous. Before starting the engine, make sure your seat belt is fastened. Check the tightness and condition of the seat belt securing bolts regularly.

CAUTION Keep the machine controls clean and dry. Your hands and feet could slide off slippery controls. If that happens you could lose control of the machine.

Obey the correct operating procedures when using the machine in very cold or very hot climates.

If the fuel tank has been empty or if any part of the fuel system has been drained or disconnected, the fuel system must be primed before attempting to start the engine.

1. For your own safety (and others) and for a maximum service life of your machine, do a pre-start inspection before starting the engine.
    1.1. If you haven't already done it, do a walk round inspection of the outside of the machine. Also, complete the daily checks as detailed in the service schedules.
    1.2. Remove dirt and rubbish from the machine interior, especially around control levers.
    1.3. Remove oil, grease and mud from the drive lever and the steering wheel.
    1.4. Make sure that your hands and shoes are clean and dry.
    1.5. Remove or secure all loose articles on the machine- such as lunch boxes, tools etc.
    1.6. Inspect the ROPS (Roll-Over Protective Structure) structure for damage. Get your JCB distributor to repair any damage. Make sure all the securing bolts are fitted and correctly tightened. Make sure the fold down ROPS frame locking pins are fitted and secure.
    1.7. Check around the machine for loose or missing bolts, screws etc. Replace or tighten where necessary.
    1.8. Inspect the seat belt and its mountings for damage and excessive wear.
    1.9. Check the following are in working order. Work lights, warning lights, horn, indicator lights, all switches, direction indicators (if installed).
    1.10. Adjust the seat so that you can comfortably reach all the driving controls with your back against the seat back.
    1.11. Fasten the seat belt.

Operator Seat

General

⚠ **CAUTION** Position the seat so that you can comfortably reach the machine controls. Do not adjust the seat while the machine is moving. You could have an accident if you operate the machine with the seat in the wrong position.

The operator's seat can be adjusted for your comfort. A correctly adjusted seat will decrease the operator fatigue.

Adjust the seat so that you can comfortably reach the machine controls.

For driving the machine, adjust the seat so that you can push the pedals fully down when your back is against the seat back.

Stop using the machine if the operators seat becomes defective. Repair or replace the seat before using the machine again.

Basic Seat

⚠ **CAUTION** Position the seat so that you can comfortably reach the machine controls. Do not adjust the seat while the machine is moving. You could have an accident if you operate the machine with the seat in the wrong position.

The seat is installed with a neutral start switch. The engine cannot be started unless the operator is sitting in the seat and the drive lever is in the neutral position.

The operator's seat can be adjusted for your comfort. A correctly adjusted seat will reduce operator fatigue. Position the seat so that you can comfortably reach the machine controls.

Weight Adjustment Lever

Adjust the weight adjustment lever to the respective driver's weight as follows:

1. Pull the lever forward.
2. Pull the lever upward.
3. Move the lever left or right as required to adjust the weight.

Figure 14.

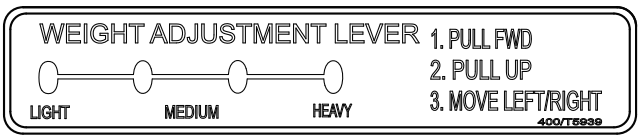

Back Rest Adjustment Control Knob

Turn the knob clockwise or counter-clockwise to adjust the backrest into desired position.

Fore and Aft Adjustment Lever

Raise the lever and slide the seat forward and backwards. Release the lever and make sure the seat lock in new position.

Seat Cushion Tilt Control

Move the lever upwards or downward to adjust the seat cushion tilt angle.

Figure 15.

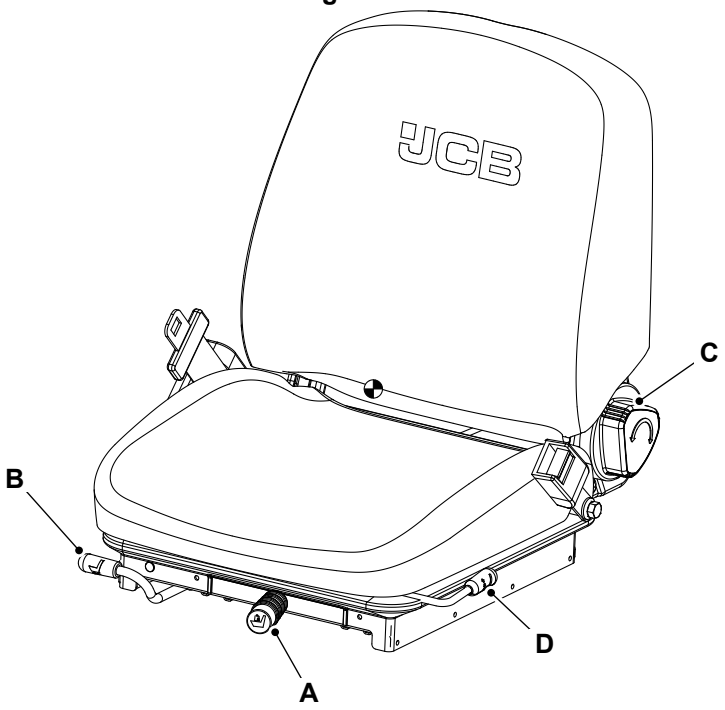

A Weight adjustment lever
B Fore and aft adjustment lever
C Back rest adjustment control knob
D Seat cushion tilt control

Seat Belt

General

⚠ **WARNING** Operating the machine without a seat belt can be dangerous. Before starting the engine, make sure your seat belt is fastened. Check the tightness and condition of the seat belt securing bolts regularly.

WARNING When a seat belt is installed on your machine replace it with a new one if it is damaged, if the fabric is worn, or if the machine has been in an accident.

Inertia Reel Seat Belt

Fasten the Seat Belt

⚠ **WARNING** If you do not wear your seat belt you could be thrown about inside the machine, or thrown out of the machine and crushed. You must wear a seat belt when using the machine. Fasten the seat belt before starting the machine.

1. Sit correctly in the seat.
2. Pull the seat belt and the tongue from the inertia reel holder in one continuous movement.
3. Push the tongue into the latch. Make sure the seat belt worn is snug and properly located on the body. Make sure the seat belt is not twisted and that it is over your hips not your stomach.

   3.1. If the seat belt 'locks' before the tongue is engaged, let the seat belt retract into the inertia reel holder then try again. The inertia mechanism can lock if you pull the seat belt too quickly or if the machine is parked on a slope.

Figure 16.

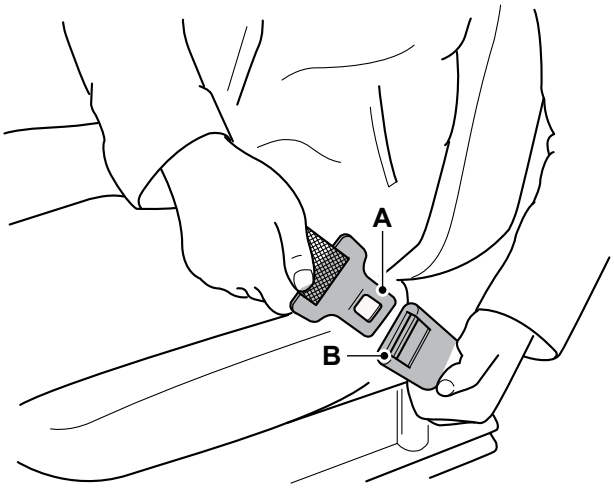

A Tongue **B** Latch

WARNING! *If the seat belt does not 'lock' when you check if the seat belt is operating correctly, do not drive the machine. Get the seat belt repaired or replaced immediately.*

4. To make sure the seat belt operates correctly, hold the middle of the seat belt and pull quickly. The seat belt should 'lock'. Refer to Figure 17.

Figure 17.

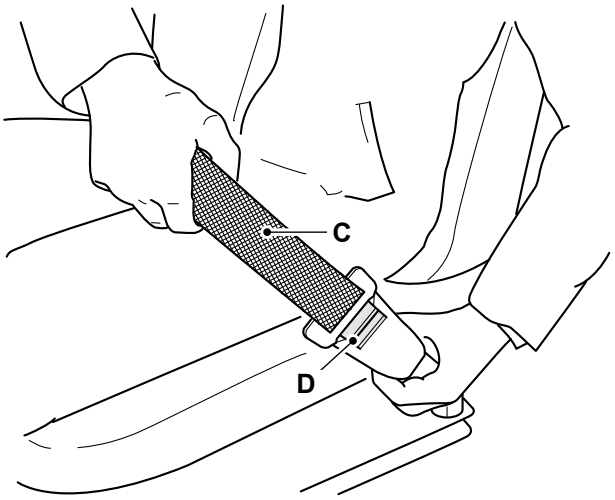

C Seat belt

D Button

Release the Seat Belt

⚠ **WARNING** Release the seat belt only after safely stopping the machine, switching off the engine and engaging the park brake (if applicable).

1. Push the button and pull the tongue from the latch.
2. Carefully let the seat belt retract into the inertia reel holder.

Starting the Engine

General

⚠ **Notice:** Do not use ether or other starting fluids to assist cold starting. Using these fluids may result in an explosion causing possible injury and/or damage to the engine.

The engine noise and or tone may be louder than usual when cold. The engine will become quieter when the engine reaches normal operating temperature.

New engines do not require a running-in period. The engine/machine should be used in a normal work cycle immediately, glazing of the piston cylinder bores resulting in excessive oil consumption, could occur if the engine is gently run-in. Under no circumstances should the engine be allowed to idle for extended periods.

If any warning lights fail to go off or come on while the engine is running, stop the engine as soon as it is safe to do so.

Safety Features

The machine is fitted with an operator seat occupancy switch and lever position switch designed to prevent inadvertent activations of the controls. If either of the features malfunction stop using the machine immediately and contact your JCB dealer. This safety feature must be checked every time before operating the machine.

Operator Seat Occupancy Switch

This feature prevents the machine from starting if it detects that the operator is not seated and drive lever is not in the park brake position. This feature will also stop the engine from running and bring the machine to a safe standstill after 2s when it detects that the operator seat is vacant and drive lever is not in park brake position.

With the ignition on the seat switch LED (Light Emitting Diode) on the instrument panel must illuminate when the seat is vacant and extinguish when it is occupied. Refer to: Instruments (Page 45).

Drive Lever Position Switch

This feature prevents the machine from starting if it detects that the drive lever is not in the park brake position (furthest position away from the operator). Refer to: Transmission Drive Lever (Page 43).

With the ignition on the park brake light on the display illuminates when the lever is in park brake position and extinguishes when it is moved to the neutral position. Refer to: Instruments (Page 45).

Start the Engine

1. Make sure that the machine is ready to start.
   Refer to: Before Starting the Engine (Page 31).
2. Make sure that the articulation lock is in the drive position.
   Refer to: Articulation Lock (Page 41).
3. Make sure there are no blocks under the machine.
4. Make sure that the drive lever is in the park position.
5. Make sure that the throttle control is in the idle position.
6. Make sure that the vibration switch is in the off position.
7. Insert the key into the ignition switch and turn it on.
8. Make sure that the following indicator lights on the instrument panel operate correctly: charging current indicator light, engine oil pressure warning light, park brake light and neutral position lights, rectify them if they do not illuminate.
9. Turn the ignition switch to the preheat position and allow the glow lamp to illuminate, then extinguish.

10. Turn the key to start position and the engine should start. Release the key immediately when the engine starts.
11. When the engine has started, check the all warning lights (excluding the neutral and park brake warning lights) have gone off.
12. Warm the engine at medium speed without load.
13. If the engine does not catch or start at 10 seconds after the starter switch is set at start position, wait for another 30 seconds and then begin the engine starting sequence again.

Figure 18. Standard Switch

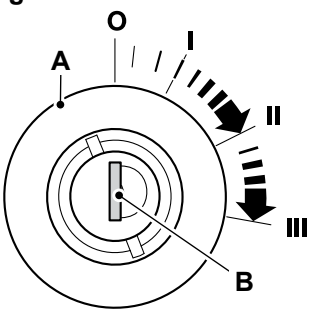

A Ignition switch **B** Ignition key

13.1. Do not allow the starter motor to run continuously for more than 20 seconds.

Table 5. Switch Positions

Position	Function
0	Off/Stop the Engine: Turn the ignition key to this position to stop the engine. Make sure the controls are in neutral before you stop the engine.
I	On: Turn the ignition key to this position to connect the battery to all of the electrical circuits. The ignition key will return to this position when it is released from position II or position III.
II	Not used.
III	Preheat position. Turn the ignition key to this position to operate the glow plug or grid heater for the appropriate time.
IV	Start position: Turn the ignition key to this position to operate the starter motor and turn the engine. The ignition switch has an inhibitor to stop the ignition switch being turned on when the engine is running.

Cold Weather Start

1. The table shows the standard preheat position times for various temperatures. This operation is not required, when the engine is warmed up. Refer to Table 6.

   1.1. Make sure to warm up the engine, not only in winter, but also in warmer seasons. An insufficiently warmed-up engine can decrease its service life.

   1.2. When the temperature drops below the figure specified detach the battery from the machine and keep it inside in a safe area.

   Temperature: -15°C (5.0°F)

2. Warm up the machine for up to 5 minutes with moderate speed and low loads until the oil in the hydraulic system has warmed up to the temperature specified.

   Temperature: 20°C (68.0°F)
   Refer to: Operating in Low Temperatures (Page 66).

Table 6.

Ambient temperature	**Preheat Position Time**	
	With Glow Lamp Timer	**Extended Time**
Above 10°C (50.0°F)	When the ignition switch key is turned to the preheat position glow lamp goes off after about 6 seconds. If necessary keep the ignition key at the preheat position for the extended time.	Not required
10°C (50.0°F) to -5°C (23.0°F)		Approximately 5 seconds
Below -5°C (23.0°F)		Approximately 10 seconds

Stopping and Parking

General

⚠ **WARNING** Do not dismount a moving machine.

WARNING If the machine must temporarily be parked on a gradient, park the machine with the front pointing uphill. Ensure that the machine is blocked by a fixed object.

WARNING An incorrectly parked machine can move without an operator. Follow the instructions in the Operator's Manual to park the machine correctly.

CAUTION Entering or leaving the operator station must only be made where steps and handrails are provided. Always face the machine when entering and leaving. Make sure the steps, handrails and your boot soles are clean and dry. Do not jump from the machine. Do not use the machine controls as handholds, only use the handrails.

Notice: The efficiency of the rams will be affected if they are not kept free of solidified dirt. Clean dirt from around the rams regularly. When leaving or parking the machine, close all rams if possible to reduce the risk of weather corrosion.

Notice: Do not suddenly stop the engine when it is running under a operating load. Instead allow it to idle for a short period with no load so that the internal temperature falls slowly and coolant loss through boiling is avoided.

1. Turn the vibration switch to the off position.
2. Stop the machine on solid, level ground where the machine will not be a hazard or danger.
3. Move the drive lever to the park brake position.
4. Make sure that the park brake indicator lights up.
5. Set the engine throttle control to the idle position.
6. Turn the ignition key to off position.
7. Leave and secure the machine:
   - 7.1. If you are leaving the machine for a long period, make sure all switches are set to off. If necessary, leave the hazard warning and/or side lights switched on.
   - 7.2. Use the handholds and step when you climb down from the machine.
   - 7.3. If available operate the battery cut off switch.
   - 7.4. Make sure that the fuel filler cap is locked (if a lock is installed).
   - 7.5. Lock the bonnet before leaving the machine.
8. Safeguard the machine against moving unintentionally by means of blocks.

Figure 19.

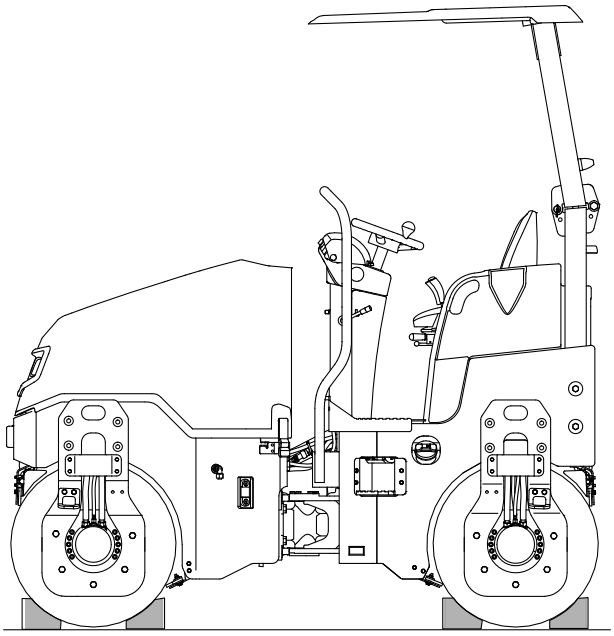

If the machine is to be shutdown for long period, it must be prepared for long storage.

Brake Operational Limits

The machine park brakes can hold the machine at gradients up to 25%.

Emergency Stop of the Engine

Press the emergency stop switch on the steering column and the engine will be stopped. Refer to: Component Locations (Page 16).

Pull the switch up to release the switch. Turning the ignition off and on will not cancel the emergency stop.

Safety Equipment

Articulation Lock

⚠ **WARNING** Make sure the articulation lock is in the transport position before you transport the machine. The articulation lock must also be in the transport position if you are carrying out daily checks or doing any maintenance work in the articulation danger zone. If the articulation lock is not in the transport position you could be crushed between the two parts of the chassis.

Drive Position

Always make sure the articulation lock has been removed before you try to drive the machine. The machine cannot be steered with the articulation lock in the transport position.

1. Remove the locking pin and clip.
2. Move the articulation lock to its drive position.
3. Put the locking pin and clips in position to secure the articulation lock in the drive position.

Figure 20.

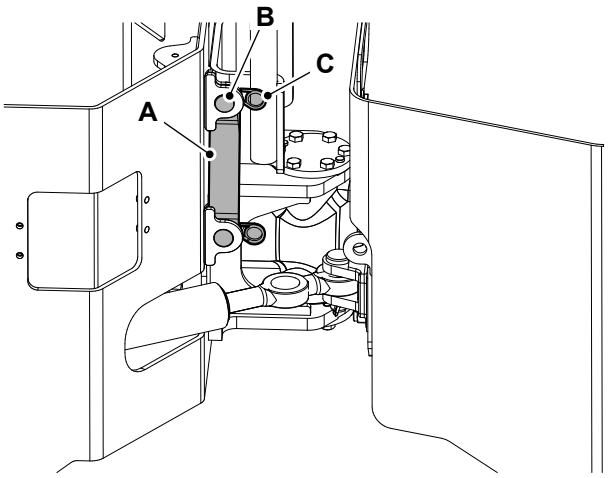

A Articulation lock- drive position
B Locking pin
C Clip

Transport Position

The articulation lock is attached to the side of the machine. The articulation lock is installed with the machine in the 'straight ahead' position.

1. Steer the machine to put the front and rear drums in a straight line.
2. Park the machine on solid, level ground.
   Refer to: Stopping and Parking (Page 39).
3. Engage the park brake, put the transmission in neutral and stop the engine.
4. Remove the pin and clip to release the articulation lock from its drive position.
5. Move the articulation lock to the transport position and retain by replacing locking pin and clip. Refer to Figure 21.
6. Make sure that locking pin is locate through the holes in the articulation lock and the roller frame.

Figure 21.

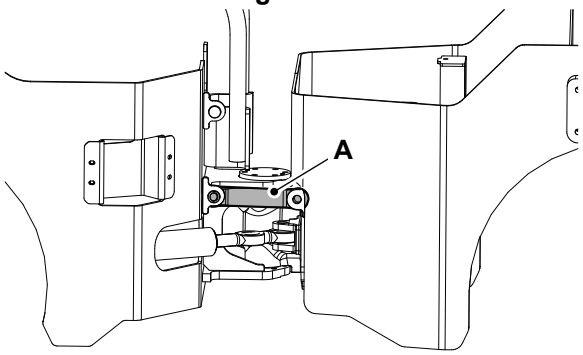

A Articulation lock- Transport position

Centre Joint Adjustment (If Required)

1. Make the machine safe.
2. Remove the spilt pin from the cylinder pin. Refer to Figure 22.
3. Remove the articulation cylinder pin.
4. Disconnect the articulation cylinder from the front chassis.
5. Loosen the centre joint front plate bolts from both side of the machine.
6. Adjust the centre joint front plate as required.
7. Tighten the centre joint front plate bolts.
8. Connect the articulation cylinder to the centre joint front plate.
9. Install the cylinder pin.
10. Install the spilt pin and make sure that it is locked correctly. Refer to Figure 22.

Figure 22.

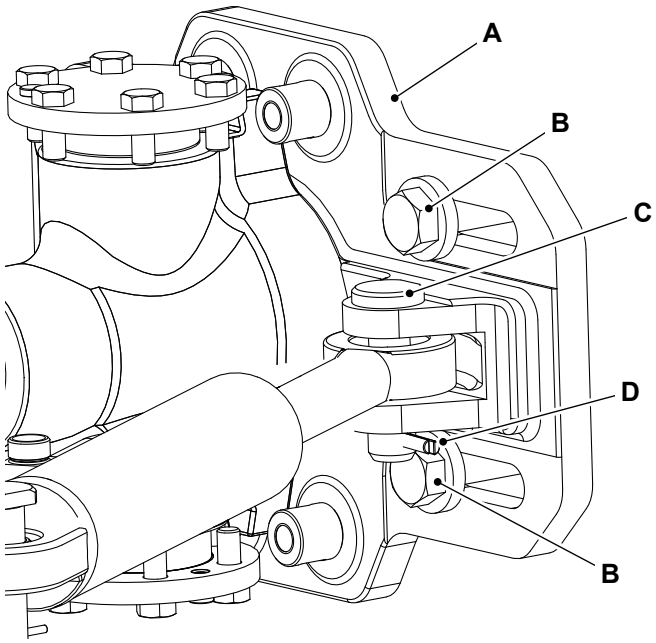

A Centre joint front plate
B Bolts
C Cylinder pin
D Spilt pin

Drive Controls

Steering Wheel

Turn the steering wheel in the direction you want to go. Refer to: Component Locations (Page 16).

The steering wheel incorporates an assister knob for single handed operation.

Hand Throttle Control

A hand operated throttle lever is located on the steering column.

The hand throttle control lever has three positions.

1. Push the lever downward into the operation position during normal machine operation.
2. Pull the lever upwards into the idle position after operation of the machine.

Figure 23.

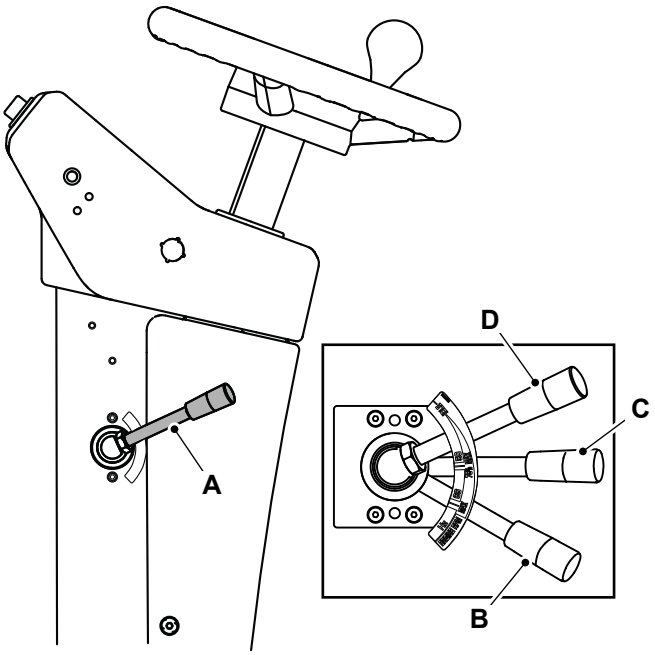

A Hand throttle control
B Operating position at 66Hz
C Operating position at 50Hz
D Idle position

Do not adjust the speed of the machine with the throttle, always use the drive lever.

Transmission Drive Lever

The drive lever has three positions: forward, neutral/park brake and reverse. Refer to Figure 24.

Use the drive lever for changing the driving direction and speed adjustments.

Figure 24.

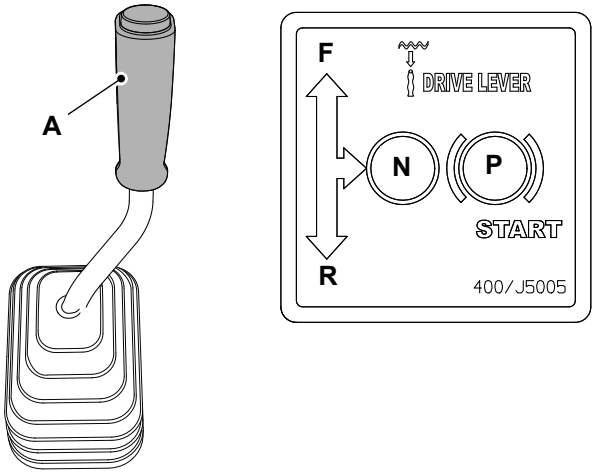

A Drive lever
R Reverse drive position
P Parkbrake position
F Forward drive position
N Neutral position

The neutral position is in the centre of the lever travel.

To operate the machine, move the drive lever forwards or backwards from the neutral position.

Move the lever forward to drive the machine forward and move the lever backward to reverse. The control is proportional (i.e. the further the lever is moved from the neutral position, the faster the machine will travel.

Move the lever to the neutral position or parkbrake to stop the machine.

When you start or stop the engine, make sure that the drive lever is in the park position and that is has locked in position.

The engine will only start when the drive lever is in the parkbrake position.

Instruments

Instrument Panel

The instruments and warning lights are grouped together on an instrument panel.

When a warning light comes on an alarm will sound (depending on severity of the condition). The only way to cancel the alarm is to set the ignition switch to position '0'. The problem can then be rectified.

Do not use the machine if it has a fault condition, or you may damage the engine and/or the transmission.

Figure 25.

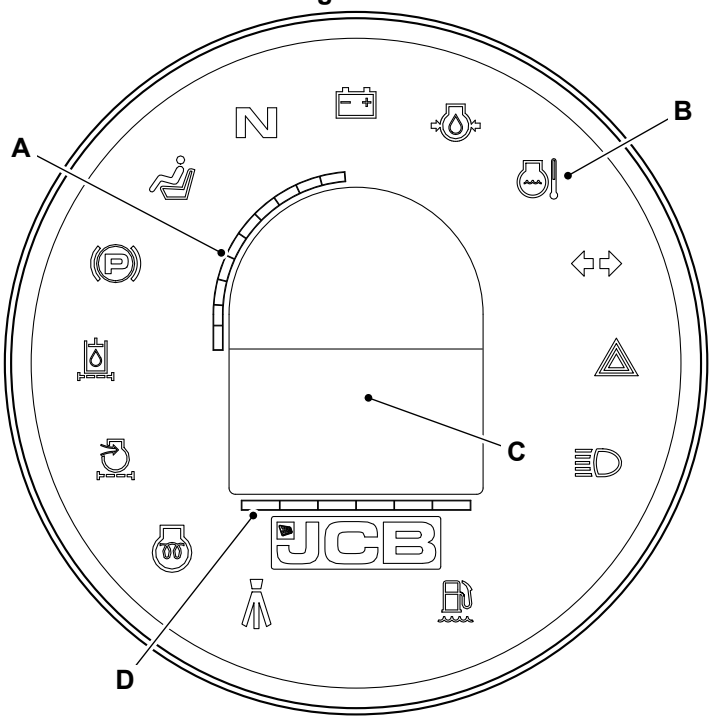

A Fuel level indicator bar
B Warning and notification symbols
C Hourmeter
D Battery voltage indicator bar

Warning and notification symbols

Figure 26.

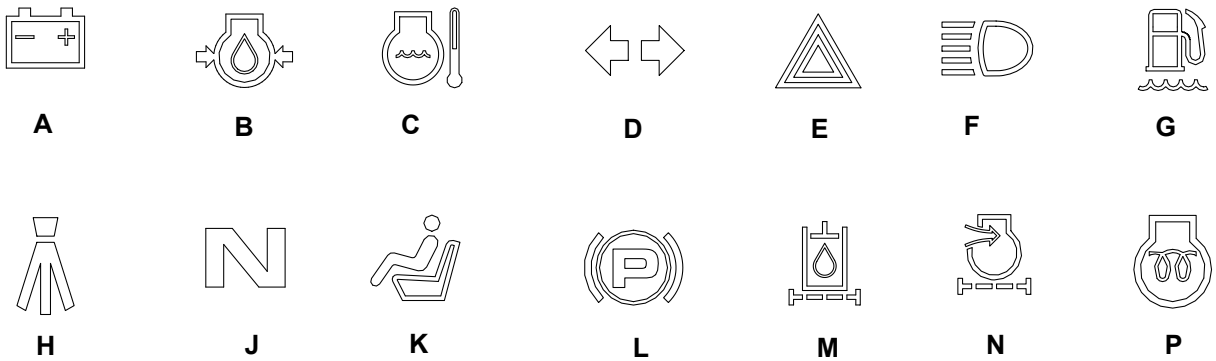

Table 7.

A	Battery charging condition	Audible/Visual. The lamp illuminates and buzzer will sound, if battery is not charging while engine is running. If battery is charging, the lamp and buzzer should go off a few seconds after the engine is started.
B	Engine low oil pressure	Audible/Visual. Illuminates if the engine oil pressure drops too far. Illuminates when the ignition switch is set to position 'I' before starting the engine but should extinguish when the engine starts, if this light remains 'on' stop the engine immediately.
C	High coolant temperature	Audible/Visual. The light will illuminate when the engine coolant temperature is too high. Stop the machine immediately and remedy the fault.
D	Direction indicator	Visual only. Illuminate with the direction indicators. Use the direction indicators to signal before you turn the machine.
E	Hazard warning indicator	Visual only. Flashes with the hazard warning lights. Turn the flashers on when your machine is a possible hazard.
F	Main beam	Visual only. Lights up when the headlight main beams are switched on. Turn the main beams off for on-coming traffic.
G	Water in fuel	Visual only. Illuminate when water in fuel is detected.
H	Water sprinkler	Visual only. Illuminate when water sprinkler is on.
J	Neutral	Visual only. Illuminate when driver lever is in neutral position.
K	Seat switch	Visual only. Illuminate when operator is not sat on the operator seat.
L	Parkbrake on	Visual only. Illuminates when the park brake is engaged.
M	Hydraulic oil filter	Visual only. Illuminate when hydraulic oil filter is blocked.
N	Engine air filter blocked	Audible/Visual. Illuminate engine air filter is blocked.
P	Engine pre heat	Visual only. Illuminate when engine pre heat is on.

Getting the Machine Moving

General

⚠ **DANGER** Only reverse at slow speeds. Look behind while reversing and be aware of bystanders in the vicinity of the machine.

WARNING If the engine or steering fails, stop the machine as quickly as possible. Do not operate the machine until the fault has been corrected.

1. Start the engine.

   Refer to: Starting the Engine (Page 36).

2. Check the operator seat is correctly adjusted.

   Refer to: Operator Seat (Page 32).

3. Check the seat belt is correctly fastened.

   Refer to: Seat Belt (Page 34).

4. Set the throttle control to the operation position.

   Refer to: Hand Throttle Control (Page 43).

5. Disengage the park brake (light goes out) by pulling the drive lever to the left.

6. Use the drive lever to move the machine in the forward or backward direction. The control is proportional (i.e. the further the level is moved from the neutral position, the faster the machine will travel). Do not adjust the machine speed with the engine speed lever.

   6.1. High speed travel can cause accidents. Always travel at a safe speed to suit working conditions.

7. While the machine is travelling slowly, check the steering and brakes. Do not drive the machine unless the steering and brakes are working correctly.

8. Put the drive lever into the neutral position in order to stop the machine.

9. Engage the park brake (light comes on) by pushing the drive lever to the right.

Slopes

General

⚠ **WARNING** Make sure that you have been trained and are familiar with the use of machines on slopes, and understand the adverse affects that slopes and site conditions can have on stability. Never use the machine on a slope if you do not understand the recommended practices for the use of machines in such applications.

WARNING If the machine starts to roll over, you can be crushed if you try to leave the machine. If the machine starts to roll over, do not try and jump from the machine. Stay in the machine, with your seat belt fastened.

Definition of Gradeability

The gradeability of a roller is the gradient angle of a firm, hard and level roadway on which a roller of standard specification, with it's longitudinal axis pointing in the incline direction, can start in the forward and reverse directions by means of it's own propulsion and then travel further for a short period.

Definition of Permissible Gradient

The permissible gradient when the machine is being used as intended is that gradient of a firm, hard and level roadway on which the roller with its longitudinal axis pointing in the incline direction can be accelerated or braked without any danger and can be reliably held at standstill by means of a parking brake which can be actuated from the operator's stand. It may, however, be limited further by the permissible longitudinal inclination. Refer to: General (Page 131).

Longitudinal Slopes

This slope angle has been measured on a hard flat surface with the machine stationary, the steering in the straight ahead position, with all tanks full and without vibration.

Loose ground, steering of the machine, vibration on, machine speed and changes to the centre of gravity could cause the machine to tip at smaller slope angles than those specified here.

Figure 27.

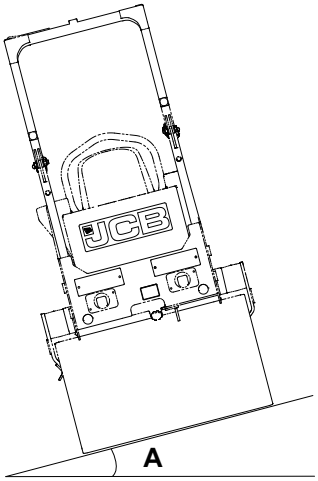

A Maximum longitudinal slope angle

Table 8.

Model	Maximum Longitudinal Slope Angle
CT260-100	18°
CT260-120	21°
CT160-80	19°
CT160-100	20°

Working with the Drum

Working without Vibration

⚠ **DANGER** Only reverse at slow speeds. Look behind while reversing and be aware of bystanders in the vicinity of the machine.

WARNING Before reversing, make sure the area behind the machine is clear of other persons. If this is not observed, injury or death can result.

Make the first pass for pressing filling material without vibration. Make the last pass for smoothing the filling material without vibration.

Make the first pass for pressing a bituminous layer without vibration. Make the last pass for smoothing the bituminous layer without vibration.

1. Set the throttle control to the maximum operation position.
2. Disengage the park brake (the indicator light should extinguish).
3. Use the drive lever to move the machine in the forward or backward direction. Do not adjust the speed of the machine with the throttle control lever.
4. Put the drive lever into the neutral position in order to stop the machine.

Figure 28.

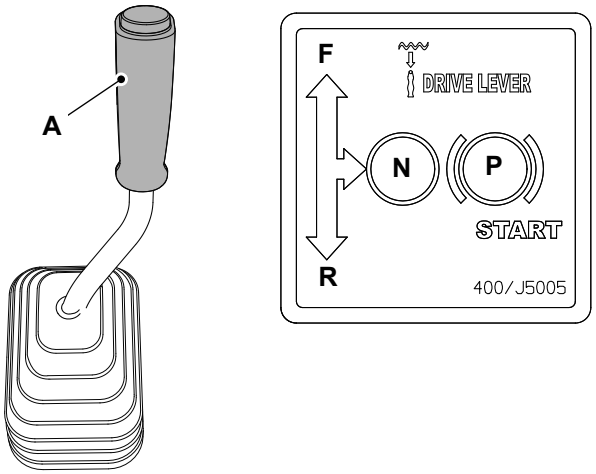

A Drive lever
R Reverse position
P Parkbrake position
F Forward position
N Neutral position

Working with Vibration

⚠ **WARNING** The vibrations from this machine can cause trench walls or high hillsides to collapse. If it is necessary to work in the vicinity of a trench or a high hillside,ensure that these are propped up. If this precaution is not taken, people working in the area can be injured or killed.

WARNING Before reversing, make sure the area behind the machine is clear of other persons. If this is not observed, injury or death can result.

Notice: When the machine is used in the immediate vicinity of a building, it is possible for the vibration to cause the building to vibrate severely and be damaged. It is necessary to check what effects the operation of the machine may have on the building.

Notice: Using vibration on hard, compaction-averse surfaces can cause serious damage.

Make the first pass for pressing the filling material without vibration. Make the last pass for smoothing the filling material without vibration.

Make the first pass for pressing a bituminous layer without vibration. Make the last pass for smoothing the bituminous layer without vibration.

1. Set the throttle control lever to the maximum operation position. Do not adjust the speed of the machine with the throttle control lever but with the drive lever.
2. Select the required vibration (front drum, rear drum or both).

   Refer to: Console Switches (Page 18).
3. Select the automatic vibration if required.
4. Use the drive lever to move the machine in the forward or backward direction.
5. Put the drive lever into the neutral position in order to stop the machine.
6. Press the vibration switch to turn on vibration. Do not vibrate when the machine is stationary. Only switch the vibration on when the machine is driving. Press the vibration switch again to switch off the vibration before the machine has stopped.
7. Do not make any further vibration passes once the optimum compaction of the filling material has been achieved as this can impair the result of the vibration.
8. Use a recognised method of measurement to test the compaction achieved.

The recommended driving speed with vibration is 3–4km/h (1.9–2.5mph)

Figure 29.

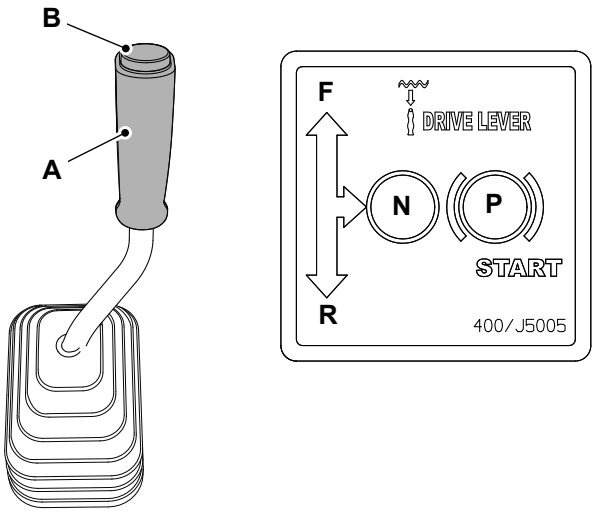

A Drive lever
B Vibration Switch
F Forward direction
R Reverse direction
N Neutral position
P Parkbrake position

Sprinklers and Scrapers

Sprinkler Control Switch

The sprinkler control switch can be changed between four positions. Turn the switch to the position as required. Refer to Figure 30.

Figure 30.

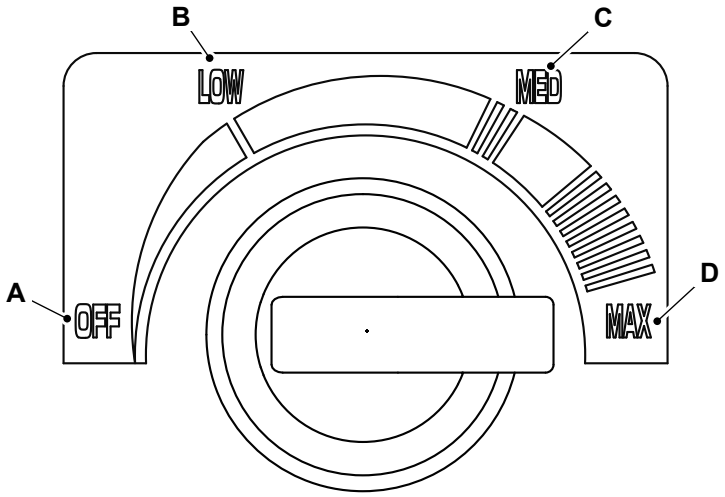

Table 9.

Item	Switch Position	On Time (sec)	Off Time (sec)
A	Off position	0%	100%
B	Low position	33% (4s)	67% (8s)
C	Medium position	50% (6s)	50% (6s)
D	Maximum position	100%	0%

Operating the Sprinklers and Scrapers

1. Make sure that ignition switch is turn to on position.
2. Set the sprinkler control switch to the required position. Refer to Figure 30.
3. To stop the sprinklers, set the sprinkler control switch to the off position.
4. When rolling asphalt the scrapers and sprinklers should be used simultaneously.
5. When rolling earth the scrapers and sprinklers should not be used.

Power Sockets

Auxiliary Power Socket

Your machine may be installed with one or more 12V auxiliary power sockets, which can be used for mobile phone chargers or other 12V powered devices. Refer to: Component Locations (Page 16).

Only connect items which are compatible with the power rating of the socket and have the correct plug.

Always operate the engine during the prolonged use of the electrical accessories, or the battery can discharge.

Make sure that the socket cap is closed when the socket is not in use.

Fire Extinguisher

General

The fire extinguisher cab be stowed in a bracket on the ROPS (Roll-Over Protective Structure) frame at the back of operator seat. Keep the fire extinguisher in the bracket until you need to use it. Refer to: Main Component Locations (Page 8).

Operation

⚠ **WARNING** Do not use the fire extinguisher in a confined space. Make sure that the area is well ventilated during and after using the fire extinguisher.

WARNING After any use, the extinguisher must be replaced or serviced.

Make sure that you understand how to use the fire extinguisher. If necessary, refer to the instructions found on the fire extinguisher.

Only try to extinguish a fire if the circumstances permit and your safety is not endangered. If necessary, contact your nearest fire department.

Using the fire extinguisher:

1. Move the machine to a safe area to prevent the fire from spreading.
2. Remove the fire extinguisher from its bracket.
3. Aim directly at the fire from an upwind position, if possible.
4. Squeeze the trigger to operate the fire extinguisher, release the trigger to stop the flow. Refer to Figure 31.

Figure 31.

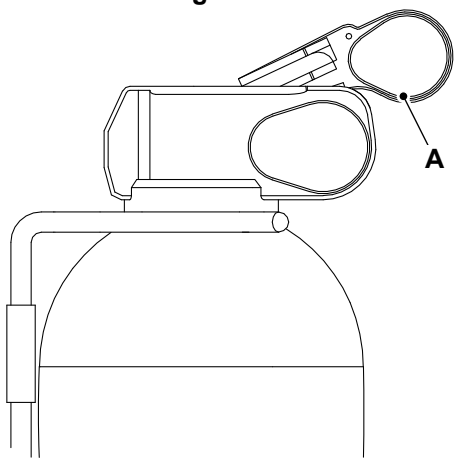

A Trigger

Moving a Disabled Machine

General

⚠ **WARNING** Use a rigid drawbar. If a towing chain must be used, then use two towing vehicles. One towing vehicle should be coupled to the front of the disabled machine. The other towing vehicle should be coupled to the rear of the disabled machine, to provide braking power. The towing vehicle must have enough pulling and braking power to move and stop the machine.

WARNING Always make sure the articulation lock has been removed before attempting to drive the machine. The machine cannot be steered with the articulation lock installed.

CAUTION The machine must be securely tied down to the transport vehicle to prevent lateral movement, fore-and-aft movement, and slewing of the upper structure. Failure to do so could cause injury to yourself or others.

Notice: Towing a machine too far or too fast can damage the transmission. Do not tow the machine further than 200 m. Use a trailer for greater distances. When towing do not travel faster than 3 km/h (2 mph). Use a rigid draw-bar. If a towing chain must be used, then use two towing vehicles. One towing vehicle should be coupled to the front of the disabled machine. The other towing vehicle should be coupled to the rear of the disabled machine, to provide braking power. The towing vehicle(s) must have enough pulling and braking power to move and stop the machine.

Notice: It is not recommended to tow a disabled machine. Permanent damage to the track motors of the disabled machine may occur if the machine is towed.

If the machine becomes disabled, the machine must be made safe, lifted onto a transporter and moved to a location where it can be repaired.

You must contact your nearest JCB dealer before you try to tow, winch or push the machine.

Towing, winching or pushing the machine without following the correct procedure will damage parts of the hydraulic system. If possible, repair the disabled machine where it stands.

In the event that towing the machine to a safe location is unavoidable follow the procedure given.

Apply the minimum force to move the machine slowly smoothly and without shocks. Tow the machine the minimum distance to a safe location for recovery by lifting.

Following this procedure the machine should be inspected by a qualified person for damage to the drive motors.

The machine must have the mechanical brake deactivated before towing. After the machine has been towed the brake must be reactivated.

Jump-Starting the Engine

⚠ **WARNING** In temperatures below freezing, the battery electrolyte may freeze if the battery is discharged or poorly charged. Do not use a battery if its electrolyte is frozen. To prevent the battery electrolyte from freezing, keep the battery at full charge.

If you try to charge a frozen battery or jump-start and run the engine, the battery could explode.

Batteries produce a flammable gas, which is explosive. Do not smoke when checking the electrolyte levels.

When jump-starting from another vehicle, make sure that the two vehicles do not touch each other. This prevents any chance of sparks near the battery.

Switch off all circuits which are not controlled by the ignition key.

Do not connect the booster (slave) supply directly across the starter motor.

Use only sound jump leads with securely attached connectors. Connect one jump lead at a time.

The machine has a negative earth electrical system. Check which battery terminal is positive (+) before making any connections. Keep metal watch straps and jewellery away from the jump lead connectors and the battery terminals - an accidental short could cause serious burns and damage equipment. Make sure you know the voltage of the machine. The booster (slave) supply must not be higher than that of the machine. Using a higher voltage supply will damage your machine's electrical system. If you do not know the voltage of your booster (slave) supply, then contact your JCB dealer for advice. Do not attempt to jump-start the

engine until you are sure of the voltage of the booster (slave) supply. The negative (-) terminal on the battery is connected to frame earth.

1. Set all switches in the cab to their off positions.
2. Get access to the battery.
3. Connect the booster cables:
   3.1. Connect the positive booster cable to the positive (+) terminal on the machine battery. Connect the other end of this cable to the positive (+) terminal of the booster supply.
   3.2. Connect the negative (-) booster cable to a good frame earth on the machine, away from and below the battery. A good frame earth is a part of the machine frame, free from paint and dirt. Do not use a pivot pin for an earth.
   3.3. Connect the other end of this cable to the negative (-) terminal on the booster supply.
4. Do the pre-start checks.
5. Start the engine.
6. Disconnect the booster cables:
   6.1. Disconnect the negative booster cable from the machine frame earth. Then disconnect it from the booster supply.
   6.2. Disconnect the positive booster cable from the positive (+) terminal on the battery. Then disconnect it from the booster supply.

Retrieval

It is not recommended to tow a disabled machine. Permanent damage to the drive motors of the disabled machine may occur if the machine is towed.

If the machine becomes disabled, the machine should be made safe, lifted onto a transporter and moved to a location where is can be repaired. Refer to: General (Page 60).

In the event that towing the machine to a safe location is unavoidable follow the procedure given.

Notice: *Towing a machine too far or too fast can damage the transmission. When towing prepare the machine as described. Failure to comply will result in lack of lubrication and seizure of the transmission motor and pump.*

For distances greater than one mile, transport the machine on a suitable vehicle. Refer to: Loading the Machine onto the Transporting Vehicle/Trailer (Page 62).

The machine must have the mechanical brake deactivated before towing. After the machine has been towed the brake must be reactivated.

1. Set the drive lever in the neutral position.
2. Attach drawbars or chains to the front or rear tow eye.

Figure 32.

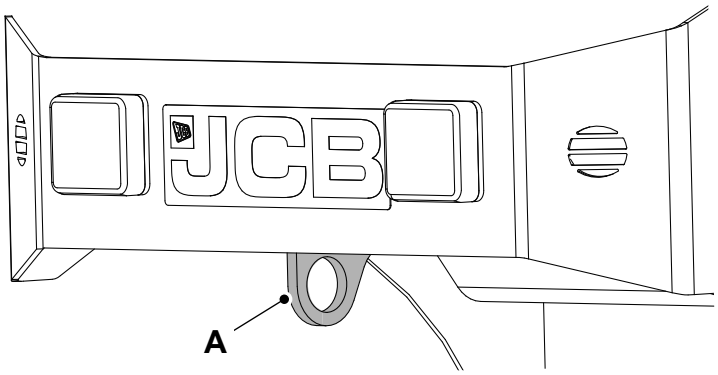

A Front tow eye

Figure 33.

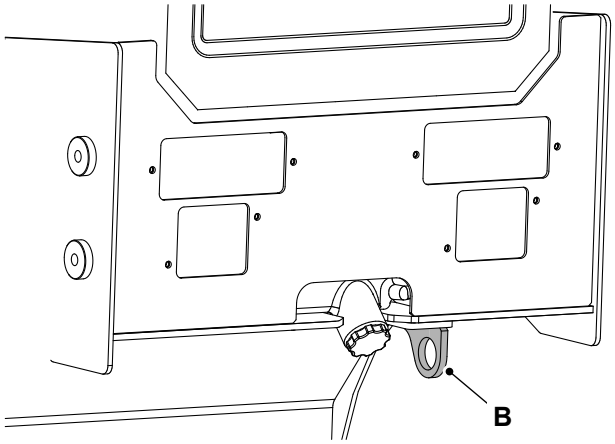

B Rear tow eye

WARNING! *Always make sure the articulation lock has been removed before attempting to drive the machine. The machine cannot be steered with the articulation lock installed.*

3. Make sure that the articulation lock is in the drive position.
   Refer to: Articulation Lock (Page 41).

Manual Mechanical Brake Deactivation

Machine installed with MSE02 Drive Motors- CT260

The maximum permissible towing force is 41kN.

1. Remove and dispose the rubber plugs from the brake protector.
2. Tighten to the bottom of the threading without blocking the screw fitted with a nut and washer in the piston.

Figure 34.

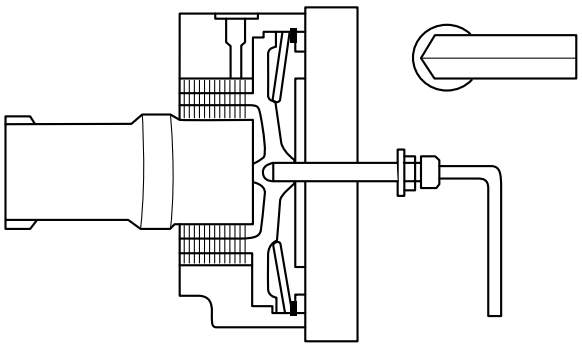

3. Tighten the nut until the motor shaft turns freely, while holding the screw.

Figure 35.

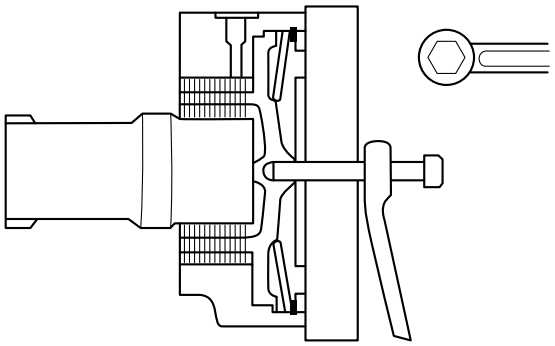

Drive Motor Installed with Danfoss Pump

Make sure that the loop bypass valve pin is 'pressed in' on the pump to loop the neutral passages internally before towing the machine.

Figure 36.

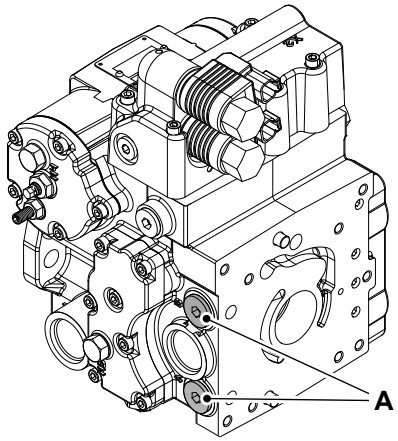

A Bypass valve pin

Machine installed with MK04 Drive Motors- CT160

The maximum permissible towing force is 28kN.

1. Remove the mechanical stopper.

Figure 37.

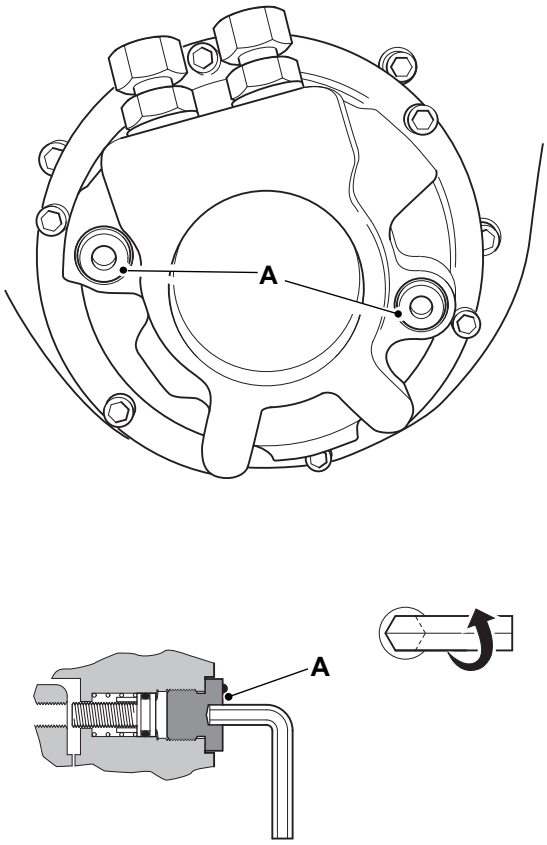

A Mechanical stopper

2. Press the screw spring to engage the park brake piston internal thread.

Figure 38.

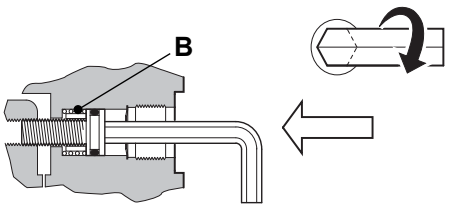

B Spring

3. Tighten the screw until the motor shaft turns freely.

Figure 39.

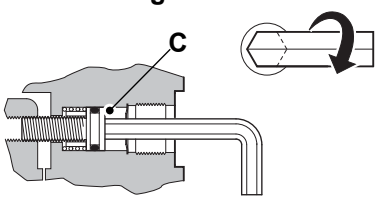

C Screw

4. Tow the machine to a safe position.
5. Loosen the screw and install the mechanical stopper.

Lifting the Machine

General

⚠ **DANGER** Do not stand underneath the raised load during the lifting/lowering procedure. Stand clear and to one side until the load has been safely lowered. Make sure that the area is clear of other people before lowering the load. If you do not follow these precautions you or others could be killed or seriously injured.

1. Park the machine on solid, level ground.
   Refer to: Stopping and Parking (Page 39).
2. Turn the ignition key to the off position.
3. Stop the engine.
4. Install the articulation lock.
   Refer to: Articulation Lock (Page 41).
5. Make sure there are no loose items in the cab or on the machine.
6. Check the unladen weight of the machine.
   Refer to: Static Dimensions (Page 129).
7. Attach the lifting chain to the single lifting point on the machine. Refer to Figure 40.

Figure 40.

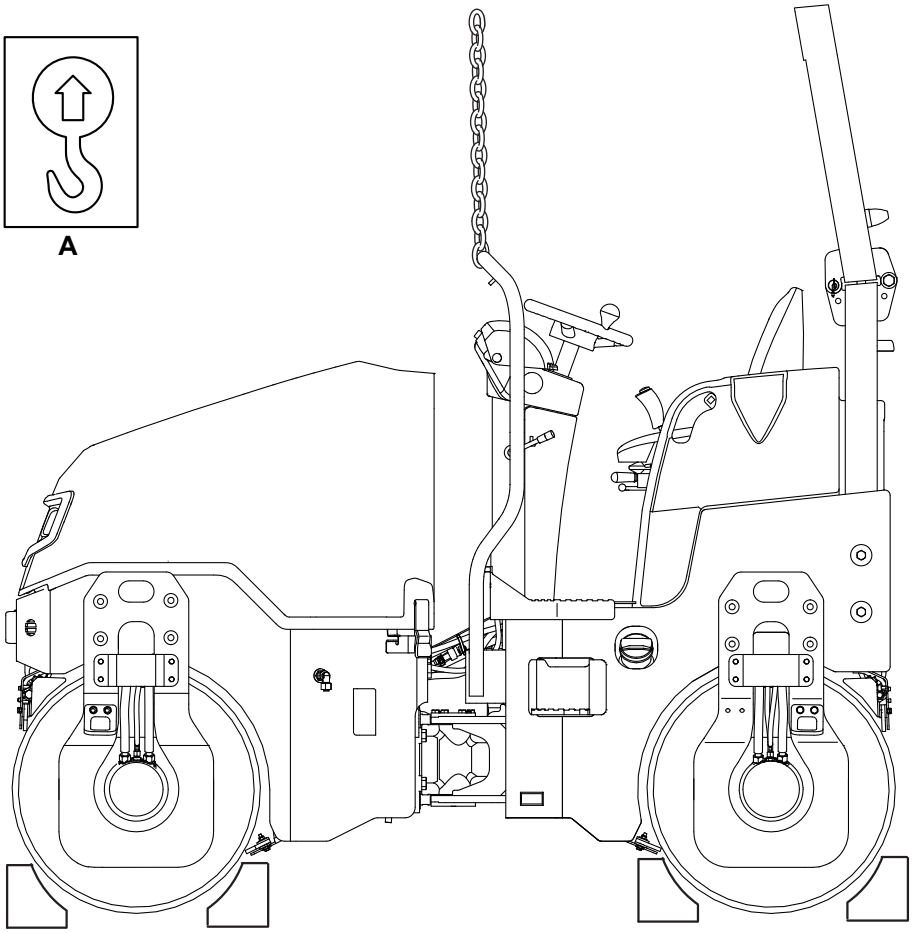

A Lifting label

8. Alternatively, machine can be lift using the lift points provided on the carrier plate. Contact your local JCB dealer for more information. Refer to Figure 41.

Figure 41.

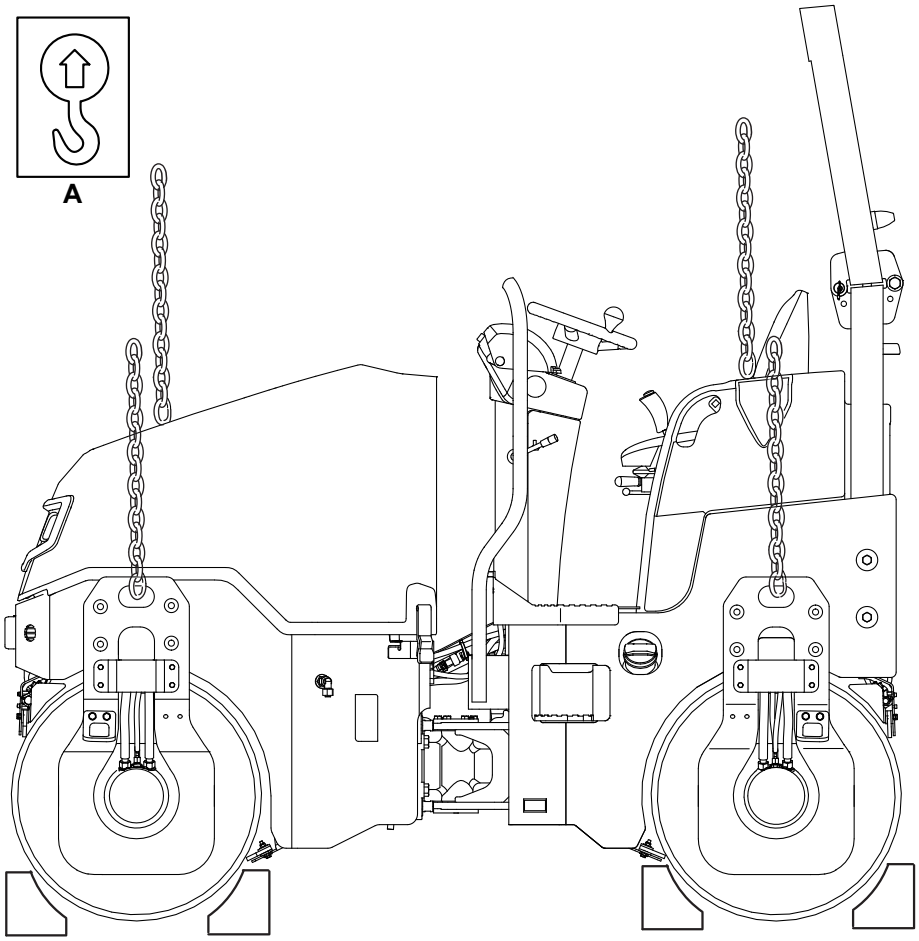

A Lifting label

9. The correct lift-point position is identified on the machine by a label.
10. Lift the machine slightly to check the balance of the machine and the installation of the lifting equipment. If the machine does not lift horizontally, adjust the length of the slings. Proceed slowly and evenly until the lift is complete.
11. Keep the machine horizontal during the lift.

Transporting the Machine

General

⚠ **WARNING** The safe transit of the load is the responsibility of the transport contractor and driver. Any machine, attachments or parts that may move during transit must be adequately secured.

CAUTION Before moving the machine onto the trailer, make sure that the trailer and ramp are free from oil, grease and ice. Remove oil, grease and ice from the machine tyres. Make sure the machine will not foul on the ramp angle.

Check the condition of the transport vehicle before the machine is loaded on to its trailer.

Make sure that the transport trailer is suitable for the dimensions and weight of your machine. Refer to: Static Dimensions (Page 129).

Before transporting the machine make sure you will be obeying the local rules and laws regarding machine transportation of all the areas that the machine will be carried through.

Loading the Machine onto the Transporting Vehicle/Trailer

⚠ **WARNING** The safe transit of the load is the responsibility of the transport contractor and driver. Any machine, attachments or parts that may move during transit must be adequately secured.

WARNING Make sure the articulation lock is in the transport position before you transport the machine. The articulation lock must also be in the transport position if you are carrying out daily checks or doing any maintenance work in the articulation danger zone. If the articulation lock is not in the transport position you could be crushed between the two parts of the chassis.

WARNING Always make sure the articulation lock has been removed before attempting to drive the machine. The machine cannot be steered with the articulation lock installed.

CAUTION You can be injured if you use incorrect or faulty lifting equipment. You must identify the weight of the item to be lifted then choose lifting equipment that is strong enough and suitable for the job. Make sure that lifting equipment is in good condition and complies with all local regulations.

Before transporting the machine make sure you will be obeying the rules and laws of all the areas that the machine will be carried through.

Make sure that the transporting vehicle is suitable for the dimensions of your machine, refer to Specifications, Static Dimensions.

Table 10. Lashing Capacity

	Force	Proof Force	Breaking Force
Forward	5,896N	7,370N	11,792N
Backward	5,896N	7,370N	11,172N
Laterally	1,801N	2,252N	3,603N

1. Place blocks at the front and rear of the trailer wheels.

Figure 42.

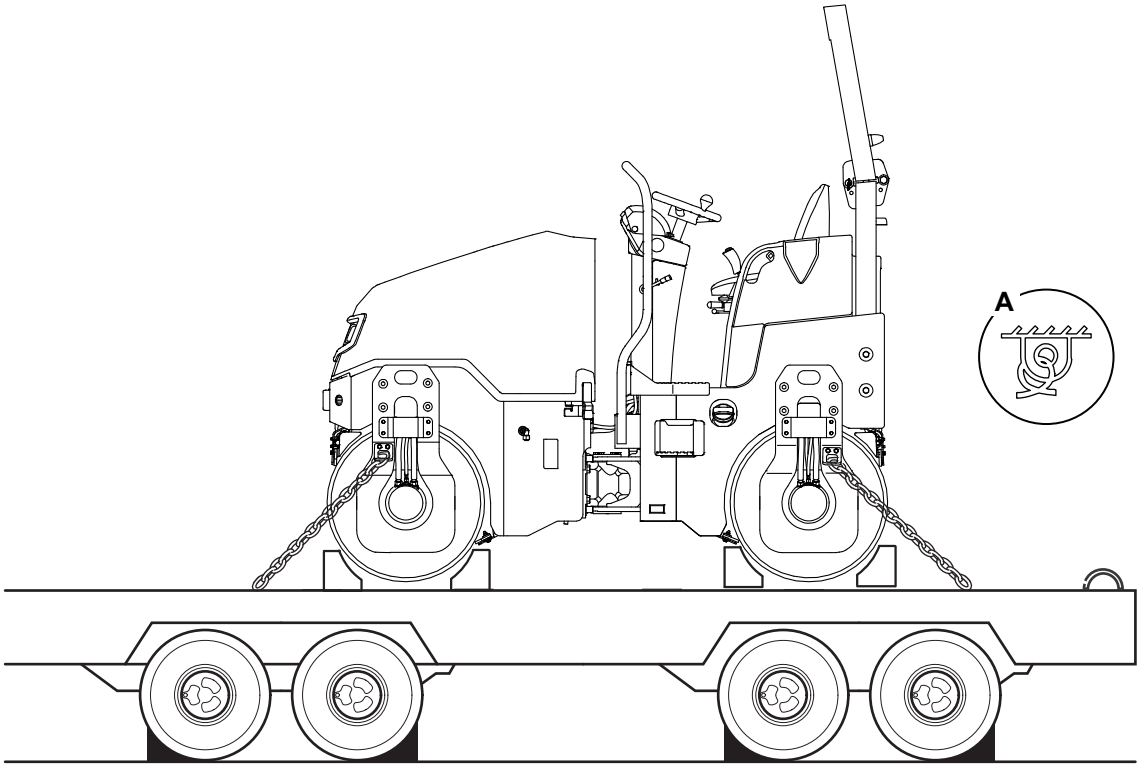

A Tie down decal

2. Install the articulation lock.
   Refer to: Articulation Lock (Page 41).
3. Using suitable lifting equipment, lift the machine onto the trailer.
   Refer to: General (Page 60).
4. Put blocks at the front and rear of the machine. Using the tie down points anchor the machine to the trailer with chains. Refer to Figure 42. Refer to Figure 43.

Figure 43.

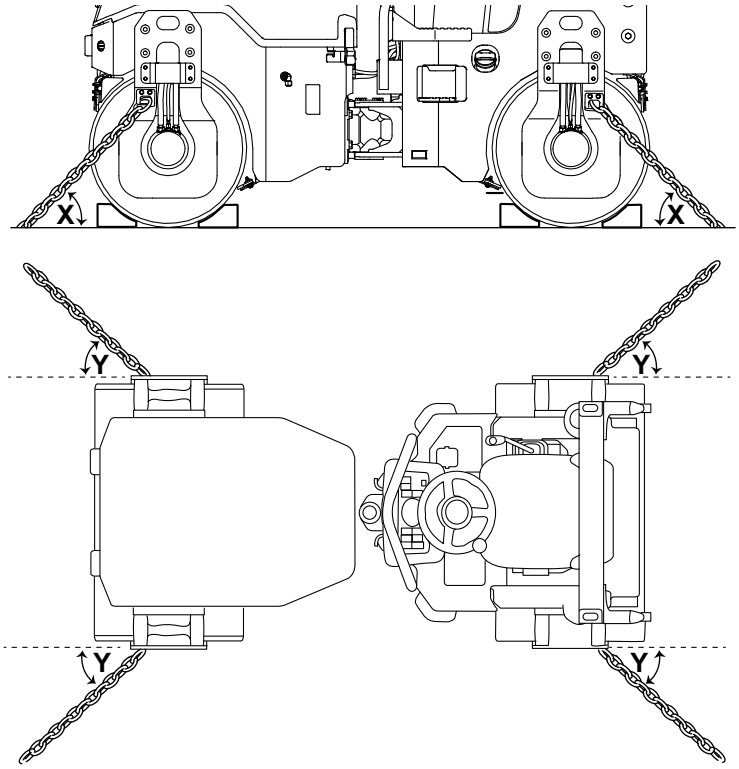

X 35° **Y** 45°

5. Measure the maximum height of the machine from the ground. Make sure the truck driver knows the clearance height before he drives away.
6. If necessary, fold down the ROPS (Roll-Over Protective Structure) frame as follow:
   6.1. Two people are required to fold the ROPS frame.
   6.2. Fold down the sunroof. Refer to Figure 44.

Figure 44.

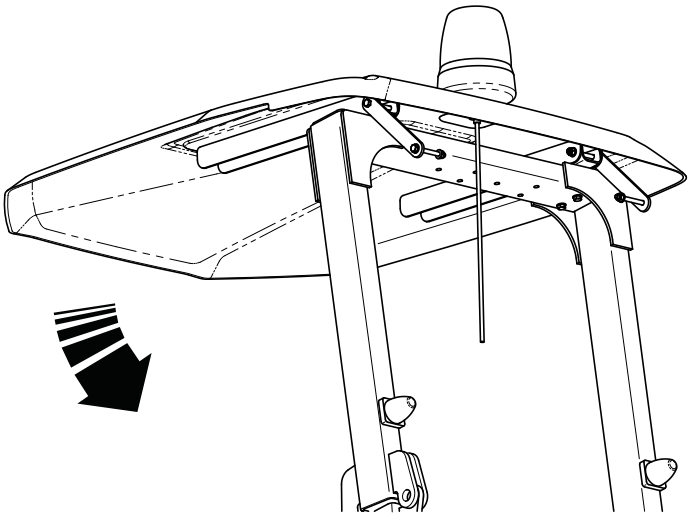

   6.3. Remove the cotter pin. Refer to Figure 45.
   6.4. Remove the ROPS lock pin using tommy bar. Refer to Figure 45.

Figure 45.

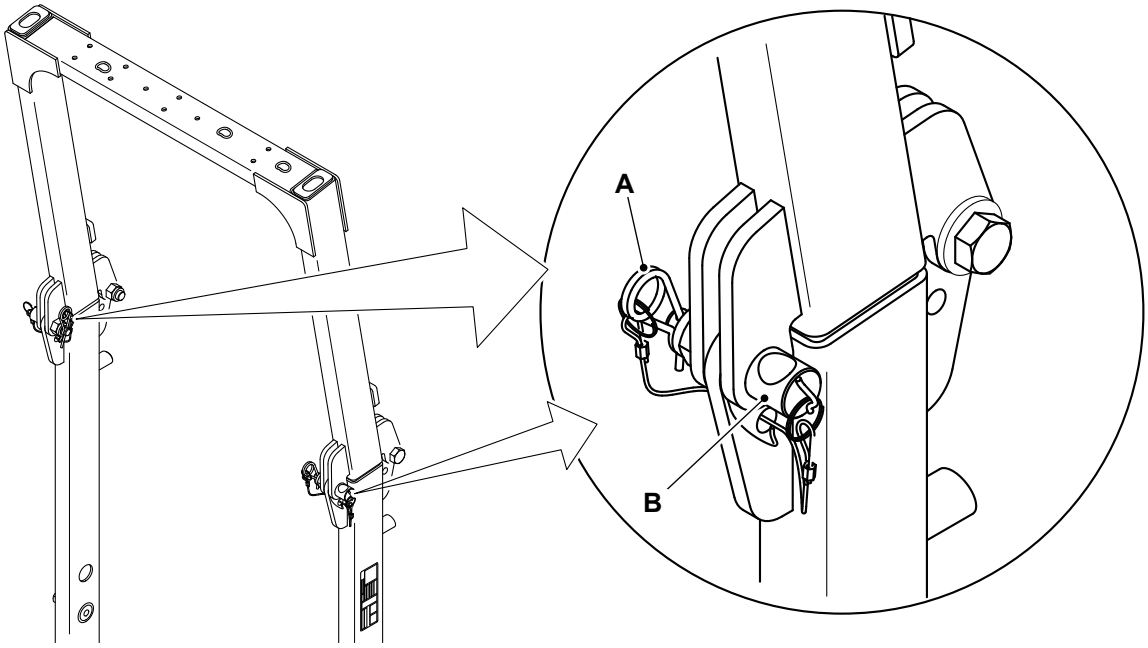

A Cotter pin **B** ROPS lock pin

6.5. Make sure that area is clear of people. Carefully fold down the ROPS frame. Refer to Figure 46.

Figure 46.

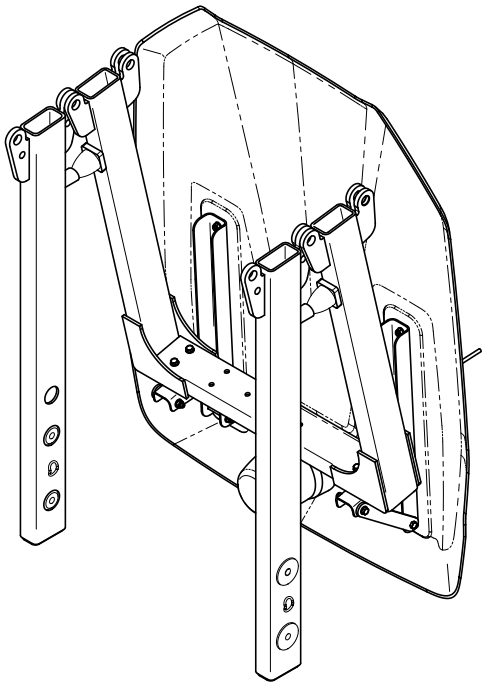

6.6. After transporting the machine, unfold the ROPS frame. Make sure that lock pin and cotter pin are installed correctly.

Operating Environment

General

Operating in Dusty or Sandy Areas

1. Air Cleaner. Frequently check, clean or replace the elements regardless of the inspection interval. (Not the safety element).
2. Securely tighten the hydraulic oil tank filler cap to prevent sand and dust from entering the hydraulic system.
3. Front and rear scrapers should be released from the drum. Rotate and lock the scrapers away from the drum.
4. Water is not necessary in this environment.

Operating in Coastal Regions

1. Check that all the plugs, bolts, and fasteners are all tightened properly.
2. After daily operations, wash the machine thoroughly and take special care when cleaning the electrical devices and hydraulic cylinders to prevent salt entry and eventual corrosion.

Operating on Wet or Soft Ground

1. Clean the Machine. Moisture or mud will cause the paint, wiring and metallic parts to deteriorate. When operating the machine keep it as dry as possible and regularly grease the machine.

In low and high temperature conditions, -12°C (10.4°F) to 51°C (123.7°F) , take the following precaution. This will make it easier to start and prevent possible damage to your machine.

Operating in Low Temperatures

⚠ **Notice:** Do not connect two batteries in series to give 24 V for starting as this can cause damage to the electrical circuits.

Notice: Do not use ether or other starting fluids to assist cold starting. Using these fluids may result in an explosion causing possible injury and/or damage to the engine.

In low temperature situations, take the following precautions. They will make for easier starting and prevent possible damage to your machine.

1. Use the correct viscosity engine lubricating oil.

   Refer to: General (Page 135).
2. Use the correct viscosity hydraulic oil.
3. If available, use a low temperature diesel fuel.
4. Use the correct coolant mixture.
5. Keep the battery at full charge.
6. Fill the fuel tank at the end of each work period, this will help to prevent condensation forming on the tank walls.
7. Protect the machine when its not in use. Park the machine inside a building or cover it with a tarpaulin.
8. Before the engine is started, remove any snow from the engine compartment or snow could get into the air filter.
9. The acceleration and braking behaviour of the machine are influenced by the viscosity of the hydraulic oil. In case of low ambient temperatures the machine requires a warm-up with moderate speed and loads until the oil in the hydraulic system has warmed up to the temperature specified.

   Temperature: 20°C (68.0°F)

Refer to: Starting the Engine (Page 36).

Operating in High Temperatures

In high temperature situations, take the following precautions to prevent possible damage to the machine.

1. Use the correct viscosity engine lubricating oil.
2. Use the correct coolant mixture.
3. Check the coolant system regularly, keep the coolant at the correct level. Make sure there are no leaks.
4. Keep the radiator/oil cooler clean, regularly remove dirt and debris from the radiator/oil cooler and the engine.
5. Check the fan belt regularly.
6. Check the air vents. Make sure that the air vents to and from the engine compartment are not blocked.
7. Check the engine pre-cleaner regularly (if installed).
8. Check the battery electrolyte level.

Refuelling

General

⚠ **CAUTION** Spilt fuel may cause skidding and therefore accidents. Clean any spilt fuel immediately.

Do not use fuel to clean the machine.

When filling with fuel, choose a well aired and ventilated area.

Notice: Consult your fuel supplier or JCB dealer about the suitability of any fuel you are unsure of.

Filling the Tank

⚠ **WARNING** Do not use petrol in this machine. Do not mix petrol with the diesel fuel. In storage tanks the petrol will form flammable vapours.

Notice: No warranty liability whatsoever will be accepted for failure of fuel injection equipment where the failure is attributed to the quality and grade of the fuel used.

If you use the incorrect type of fuel or fuel which is contaminated, then damage to the fuel injection system can occur. Refer to: General (Page 135).

Fill the fuel tank at the end of each work period, this will help to prevent condensation forming on the tank walls.

To fill the diesel tank:

1. Make the machine safe.
   Refer to: General (Page 39).
2. Remove all the unwanted material around the diesel fuel cap. Refer to Figure 47.
3. Remove the diesel fuel tank filler cap.
4. Add the fuel through the filler neck until it reaches the full mark.
5. Install the diesel fuel tank filler cap. Refer to Figure 47.
6. If there is any fuel spillage, clean it immediately.

Figure 47.

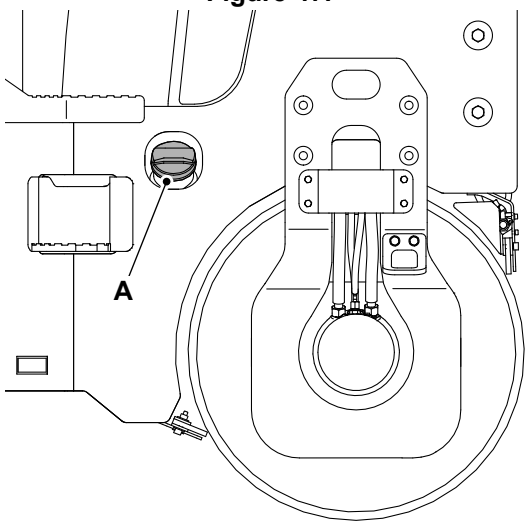

A Diesel tank filler cap

Preservation and Storage
Cleaning

General

⚠ **WARNING** When using cleaning agents, solvents or other chemicals, you must adhere to the manufacturer's instructions and safety precautions.

WARNING Airborne particles of light combustible material such as straw, grass, wood shavings, etc. must not be allowed to accumulate within the engine compartment or in the propshaft guards (when installed). Examine these areas frequently and clean at the beginning of each work shift or more often if required. Before opening the engine cover, make sure that the top is clear of debris.

CAUTION To avoid burning, wear personal protective equipment when handling hot components. To protect your eyes, wear goggles when using a brush to clean components.

Notice: Cleaning metal parts with incorrect solvents can cause corrosion. Use only recommended cleaning agents and solvents.

Notice: The efficiency of the rams will be affected if they are not kept free of solidified dirt. Clean dirt from around the rams regularly. When leaving or parking the machine, close all rams if possible to reduce the risk of weather corrosion.

Notice: Never use water or steam to clean inside the operator station. The use of water or steam could damage the machine electrics and render the machine inoperable. Remove dirt using a brush or damp cloth.

Clean the machine with water and/or steam. Do not let mud, debris etc. to collect on the machine.

Before you do any service procedures that require components to be removed:

- The cleaning must be done either in the area of components to be removed, or in the case of major work, or work on the fuel system, the whole engine and the surrounding machine must be cleaned.
- When cleaning is complete, move the machine away from the wash area or alternatively, remove the material washed from the machine.

When you remove components, be aware of exposure to dirt and debris. Cover any open ports and remove the deposits before proceeding.

Refer to the individual clean procedures throughout the Maintenance section. Refer to: Maintenance Schedules (Page 83).

Detergents

Do not use a full strength detergent. Always dilute the detergents as per the manufacturer's recommendations, or damage to the paint finish can occur.

Always obey the local regulations regarding the disposal of debris created from cleaning the machine.

Pressure Washing and Steam Cleaning

⚠ **CAUTION** When using a steam cleaner, wear safety glasses or a face shield as well as protective clothing. Steam can cause personal injury.

Notice: The batteries and other components could be damaged by high pressure washing systems. Special precautions must be taken if the machine is to be washed using a high pressure system.

Use a low pressure washer and brush to remove dried mud or dirt.

Use a steam cleaner to remove soft dirt and oil.

When cleaning around decals:

- Ensure the water pressure is kept below 138bar (2,000.0psi).
- Keep water temperature below 80°C (175.9°F).
- Use a spray nozzle with a 40° wide angle spray pattern.
- Keep the nozzle at least 300mm away from and perpendicular (at 90° degrees) to the decal.

The machine must always be greased (if appropriate) after pressure washing or steam cleaning.

Preparation

1. Make the machine safe.
   Refer to: Maintenance Positions (Page 87).
2. Stop the engine and let it cool for at least one hour. Do not try to clean any part of the engine while it is running.
3. Make sure that all of the electrical connectors are correctly coupled. If the connectors are open, attach the correct caps or seal with water proof tape.

Checking For Damage

General

Refer to the individual condition checks throughout the Maintenance section. Refer to: Maintenance Schedules (Page 83).

Storage

General

If the machine will not be used for an extended period, you must store the machine correctly. If you prepare the machine carefully and apply on-going care you can prevent deterioration and damage to the machine while it is in storage.

Storage Area

The machine can be stored in a temperature range of: -40°C (-39.9°F) to 54°C (129.1°F)

When possible, you must keep the machine in a dry building or shelter.

If only an outdoor storage area is available, look for a storage area with good drainage.

Prepare the Machine for Storage

1. Clean the machine to remove all unwanted material and corrosive products.
2. Dry the machine to remove solvents and moisture.
3. Touch-up any damaged paint.
4. Apply grease to the moving parts (if applicable).
5. Examine the machine for worn or damaged parts. Replace if necessary.
6. Fill the fuel tank to prevent a build up of condensation in the tank (if applicable).
7. Examine the coolant condition. Replace if necessary.
8. Examine all fluid levels. Top up if necessary.

Put into Storage

1. Park the machine on solid, level ground.
   1.1. Park the machine in an area where it is easy to access. (In case the machine does not start at the end of the storage period).
   1.2. Put suitable timbers under the machine to eliminate direct contact with the ground.
2. Retract all of the rams and lower the attachment to the ground.
3. Vent the hydraulic system.
4. Remove the ignition key.
5. Apply a thin layer of grease or petroleum jelly to all of the exposed ram piston rods.
6. Remove the battery.
   6.1. Keep the battery in warm, dry conditions.
   6.2. Charge the battery periodically.
7. If you keep the machine outdoors, cover the machine with tarpaulins or plastic sheets.

During Storage

Operate the machine functions each week to prevent a build up of rust in the engine and hydraulic circuits, and to minimise the deterioration of the hydraulic seals.

1. Remove any air cleaner covers or exhaust covers.
2. Remove the grease or petroleum jelly from the ram piston rods.

3. Examine all fluid levels. If necessary, add more fuel.
4. Install a charged battery.
5. Start the engine.
6. Operate the hydraulic controls. Make sure that the hydraulic functions operate correctly.
7. Prepare the machine for storage.

Take out of Storage

1. Examine the coolant condition. Replace if necessary.
2. Examine all fluid levels. If necessary replace the fluid or add more fluid.
3. Clean the machine to remove all unwanted material and corrosive products. Dry the machine to remove solvents and moisture
4. Remove the grease or petroleum jelly from the ram piston rods.
5. Install a charged battery.
6. Start the engine.
7. Operate the hydraulic controls. Make sure that the hydraulic functions operate correctly.

Security

General

Vandalism and the theft of unattended machines is an ever increasing problem and JCB is doing everything possible to help stop this.

Your JCB dealer will be pleased to provide information on any of these sensible precautions. Act now!

Construction Equipment Security and Registration Scheme (CESAR)

CESAR (Construction Equipment Security and Registration) is a simple, effective method of machine identification and registration that operates throughout the United Kingdom and Ireland and across the whole spectrum of JCB products.

CESAR is a scheme to help decrease plant theft, and was developed by the Metropolitan Police and the Home Office Plant Theft Action Group.

The key to the scheme is its simplicity and it will mean that every police officer in the country will know how to identify construction machinery and verify ownership. This will provide a major leap forward in both protecting machinery, and recovering it.

The Construction Equipment Association is managing the scheme, and Datatag are providing the security material and support. JCB is fully supportive of the CESAR initiative and will offer it as a factory option across the range.

The CESAR kit includes 2 tamper proof triangular identification plates installed on either side of the machine, a unique transponder, mini radio frequency identification tags concealed throughout the machine, Datatag micro dots, and a unique DNA coded chemical painted on the machines major components. Plus a registration certificate logged onto the CESAR or DVLA databases, and a change of keeper form.

LiveLink

Your JCB machine may be installed with LiveLink, JCB's advanced machine monitoring system. LiveLink monitors a range of information about your machine and sends it through cellular and satellite communication back to JCB's secure monitoring centre.

The machine owners and JCB dealers can then view that information through the LiveLink website, by email and even through text message. If you want to know how LiveLink can help manage your JCB machines, contact your local dealer for more information.

Maintenance
Introduction

General

Your machine has been designed and built to give maximum performance, economy and ease of use under a wide variety of operating conditions. Prior to delivery, your machine was inspected both at the factory and by your dealer to make sure that it reaches you in optimum condition. To maintain this condition and trouble free operation it is important that the routine services and maintenance, as specified in this manual, are done at the recommended specified intervals and it is recommended that this is done by an approved JCB dealer using genuine JCB parts. Servicing/repairs carried out by unauthorised personnel or the use of non-genuine inferior quality parts could limit machine warranty.

After completing any routine servicing, maintenance or repairs you must complete the functional checks according to the maintenance schedule.

This section of the manual gives full details of the service requirements necessary to maintain your JCB machine at peak efficiency.

It can be seen from the service schedules on the following pages that many essential service checks must only be done by a JCB trained specialist competent person. JCB dealer service engineers have been trained by JCB to do such specialist tasks, and are equipped with the necessary special tools and test equipment to do such tasks, thoroughly, safely, accurately and efficiently.

JCB regularly updates its dealers to advise them of any machine developments, changes in specifications and procedures. Therefore only a JCB dealer is fully able which makes them best placed to maintain and service your machine.

A service record sheet or book is provided at the back of this publication which will enable you to plan your service requirements and keep a service history record. It must be dated, signed and stamped by your dealer each time your machine is serviced.

Remember, if your machine has been correctly maintained, not only will it give you improved reliability but its resale value will be greatly enhanced.

When the machine is removed from service, local regulations for machine decommissioning and disposal will vary. Contact your nearest JCB dealer for further information.

Owner/Operator Support

JCB together with your dealer wants you to be completely satisfied with your new JCB machine. However, if you do have a problem, you can contact your dealers service department who are there to help you!

You will have been given the names of the relevant service contacts at your dealer when the machine was supplied.

To get the most from your dealer please help them to satisfy you by providing them with:

1. Your name, address and telephone number.
2. Your machine model and serial number.
3. The date of purchase and hours of work.
4. The nature of the problem.

Remember, only your JCB dealer has access to the vast resources available at JCB to help support you. In addition, your dealer is able to offer a variety of programmes covering warranty, fixed price servicing, safety inspections, including weight tests, covering both legal and insurance requirements.

It is machine owner's responsibility to ensure that the maintenance is carried out properly in accordance with the requirement of this manual.

Service/Maintenance Agreements

To help plan and spread the costs of maintaining your machine, we strongly recommend you take advantage of the many service and maintenance agreements your dealer can offer. These can be tailor made to meet your operating conditions, work schedule etc.

Please consult your JCB dealer for details.

Initial Service and Inspection

To further protect your machine's performance it is essential your JCB distributor carries out an initial service and inspection when the machine is three months old or when it has completed 250h of operation (whichever occurs first). You should notify your distributor in advance to allow the necessary arrangements to be made.

Obtaining Spare Parts

If you use non-genuine JCB parts or consumables, then you can compromise the health and safety of the operator and cause machine failure.

A parts book for your machine is available from your JCB dealer. The parts book will help you identify parts and order them from your JCB dealer.

Your dealer will need to know the exact model, build and serial number of your machine. Refer to: Product and Component Identification (Page 9).

The data plate also shows the serial numbers of the engine, transmission and axle(s), where applicable. Remember, if any of these units have been changed, the serial number on the data plate may be wrong. Check on the unit itself.

Maintenance Safety

General

Raised Machine

Never position yourself or any part of your body under a raised machine which is not correctly supported. If the machine moves unexpectedly you could become trapped and suffer serious injury or be killed.

Compressed Air

Compressed air is dangerous. Wear personal protective equipment. Never point a compressed air jet at yourself or others.

Springs

Always wear personal protective equipment when dismantling assemblies containing components under pressure from springs. This will protect against eye injury from components accidentally flying out.

Metal Splinters

You can be injured by flying metal splinters when driving metal pins in or out. Use a soft faced hammer or copper drift to remove and install metal pins. Always wear personal protective equipment.

Communications

Bad communications can cause accidents. If two or more people are working on the machine, make sure each is aware of what the others are doing. Before starting the engine make sure the others are clear of the danger areas. Examples of danger areas are: the rotating blades and belt on the engine, the attachments and linkages, and anywhere beneath or behind the machine. People can be killed or injured if these precautions are not taken.

Repairs

If your machine does not function correctly in any way, get it repaired straight away. Neglect of necessary repairs could result in an accident or affect your health. Do not try to do repairs or any other type of maintenance work you do not understand. To avoid injury and/or damage get the work done by a specialist engineer.

Hydraulic Pressure

Hydraulic fluid at system pressure can injure you. Before connecting or removing any hydraulic hose, residual hydraulic pressure trapped in the service hose line must be vented. Make sure the hose service line has been vented before connecting or removing hoses. Make sure the engine cannot be started while the hoses are open.

'O' rings, Seals and Gaskets

Badly installed, damaged or rotted 'O' rings, seals and gaskets can cause leakages and possible accidents. Renew whenever disturbed unless otherwise instructed. Do not use Triochloroethane or paint thinners near 'O' rings and seals.

Arc Welding

To prevent the possibility of damage to electronic components, disconnect the battery and the alternator before arc-welding on the machine or attached implements.

If the machine is equipped with sensitive electrical equipment, i.e. amplifier drivers, electronic control units (ECUs), monitor displays, etc., then disconnect them before welding. Failure to disconnect the sensitive electrical equipment could result in irreparable damage to these components.

Parts of the machine are made from cast iron, welds on cast iron can weaken the structure and break. Do not weld cast iron. Do not connect the welder cable or apply any weld to any part of the engine.

Always connect the welder earth (ground) cable to the same component that is being welded to avoid damage to pivot pins, bearings and bushes. Attach the welder earth (ground) cable a distance from the part being welded no more than 0.6 m.

Counterweights

Your machine may be installed with counterweights. They are extremely heavy. Do not attempt to remove them.

Accumulators

The accumulators contain hydraulic fluid and gas at high pressure. Prior to any work being carried out on systems incorporating accumulators, the system pressure must be discharged by a JCB dealer, as the sudden release of the hydraulic fluid or gas may cause serious injury or death.

Hot Components

Touching hot surfaces can burn skin. The engine and machine components will be hot after the unit has been running. Allow the engine and components to cool before servicing the unit.

Soft Ground

A machine can sink into soft ground. Never work under a machine on soft ground.

Working Under the Machine

Make the machine safe before getting beneath it. Make sure that any attachments on the machine are correctly attached. Engage the park brake, remove the ignition key, disconnect the battery. If the machine has wheels use blocks to prevent unintentional movement.

Lifting Equipment

You can be injured if you use incorrect or faulty lifting equipment. You must identify the weight of the item to be lifted then choose lifting equipment that is strong enough and suitable for the job. Make sure that lifting equipment is in good condition and complies with all local regulations.

Chemicals

Certain seals and gaskets (e.g. crankshaft oil seal) on JCB machines contain fluoroelastomeric materials such as Viton®, FluorelTM and Technoflon®. Fluoroelastomeric materials subjected to high temperatures can produce highly corrosive hydrofluoric acid. This acid can severely burn. New fluoroelastomeric components at ambient temperature require no special safety precautions. Used fluoroelastomeric components whose temperatures have not exceeded 300 °C (571.6 °F) require no special safety precautions. If evidence of decomposition (e.g. charring) is found, refer to the next paragraph for safety instructions. Do not touch component or surrounding area. Used fluoroelastomeric components subjected to temperatures greater than 300 °C (571.6 °F) (e.g. engine fire) must be treated using the following safety procedure. Make sure that heavy duty gloves and special safety glasses are worn: Thoroughly wash contaminated area with 10% calcium hydroxide or other suitable alkali solution, if necessary use wire wool to remove burnt remains. Thoroughly wash contaminated area with detergent and water. Contain all removed material, gloves etc. used in this operation in sealed plastic bags and dispose of in accordance with Local Authority Regulations. Do not burn fluoroelastiometric materials.

Hydraulic Hoses

Never re-use hydraulic hose end crimps or use reusable hose end crimps.

Personal Protective Equipment

Use the appropriate personal protective equipment before performing maintenance on the machine, otherwise you could be injured.

Working at Height

Use appropriate access equipment such as ladders or a working platform if it is necessary to work at height to perform maintenance tasks on the machine. If you do not use suitable access equipment there is a risk of falling, resulting in personal injury or death.

Fluids and Lubricants

Oil

Oil is toxic. If you swallow any oil, do not induce vomiting, seek medical advice. Used engine oil contains harmful contaminants which can cause skin cancer. Do not handle used engine oil more than necessary. Always use barrier cream or wear gloves to prevent skin contact. Wash skin contaminated with oil thoroughly in warm soapy water. Do not use petrol, diesel fuel or paraffin to clean your skin.

Fluid Under Pressure

Fine jets of fluid at high pressure can penetrate the skin. Keep face and hands well clear of fluid under pressure and wear personal protective equipment. Hold a piece of cardboard close to suspected leaks and then examine the cardboard for signs of fluid. If fluid penetrates your skin, get medical help immediately.

Fuel

Fuel is flammable, keep naked flames away from the fuel system. Stop the engine immediately if a fuel leak is suspected. Do not smoke while refuelling or working on the fuel system. Do not refuel with the engine running. Completely wipe off any spilt fuel which could cause a fire. There could be a fire and injury if you do not follow these precautions.

Antifreeze

Never perform checks or maintenance on the cooling system when it is hot. Never remove radiator cap when engine is hot - severe risk of scalding. Never remove radiator cap when the engine is running. Antifreeze is toxic. If accidentally swallowed, medical advice must be sought Immediately. Antifreeze is corrosive to the skin. If accidentally spilled on to skin, it must be washed off immediately. Protective clothing and eye protection must be worn when handling antifreeze.

Hygiene

JCB lubricants are not a health risk when used correctly for their intended purposes.

However, excessive or prolonged skin contact can remove the natural fats from your skin, causing dryness and irritation.

Low viscosity oils are more likely to do this, so take special care when handling used oils, which might be diluted with fuel contamination.

Whenever you are handling oil products you must maintain good standards of care and personal and plant hygiene. For details of these precautions we advise you to read the relevant publications issued by your local health authority, plus the following.

Storage

Always keep lubricants out of the reach of children.

Never store lubricants in open or unlabelled containers.

Waste Disposal

⚠ **CAUTION** It is illegal to pollute drains, sewers or the ground. Clean up all spilt fluids and/or lubricants.

Used fluids and/or lubricants, filters and contaminated materials must be disposed of in accordance with local regulations. Use authorised waste disposal sites.

CAUTION Damaged or spent batteries and any residue from fires or spillage must be put in a suitable closed receptacle and must be disposed of in accordance with local environmental waste regulations.

All waste products must be disposed of in accordance with all the relevant regulations.

The collection and disposal of used oil must be in accordance with any local regulations. Never pour used engine oil into sewers, drains or on the ground.

Handling

⚠ **CAUTION** The temperature of the hydraulic oil will be high soon after stopping the machine. Wait until it cools before beginning maintenance.

New Oil

There are no special precautions needed for the handling or use of new oil, beside the normal care and hygiene practices.

Used Oil

Used engine crankcase lubricants contain harmful contaminants.

Here are precautions to protect your health when handling used engine oil:

- Avoid prolonged, excessive or repeated skin contact with used oil
- Apply a barrier cream to the skin before handling used oil. Note the following when removing engine oil from skin:
  - Wash your skin thoroughly with soap and water
  - Using a nail brush will help
  - Use special hand cleansers to help clean dirty hands
  - Never use petrol, diesel fuel, or paraffin for washing
- Avoid skin contact with oil soaked clothing
- Don't keep oily rags in pockets
- Wash dirty clothing before re-use
- Throw away oil-soaked shoes

First Aid - Oil

Eyes

In the case of eye contact, flush with water for 15min. If irritation persists, get medical attention.

Swallowing

If oil is swallowed do not induce vomiting. Get medical advice.

Skin

In the case of excessive skin contact, wash with soap and water.

Spillage

Absorb with sand or a locally approved brand of absorbent granules. Scrape up and remove to a chemical disposal area.

Fires

⚠ **WARNING** Do not use water to put out an oil fire. This will only spread it because oil floats on water.

Extinguish oil and lubricant fires with carbon dioxide, dry chemical or foam.

Battery

⚠ **DANGER** Batteries give off an explosive gas. Do not smoke when handling or working on the battery. Keep the battery away from sparks and flames.

Battery electrolyte contains sulphuric acid. It can burn you if it touches your skin or eyes. Wear goggles. Handle the battery carefully to prevent spillage. Keep metallic items (watches, rings, zips etc) away from the battery terminals. Such items could short the terminals and burn you.

Set all switches to off before disconnecting and connecting the battery. When disconnecting the battery, take off the earth (-) lead first.

Re-charge the battery away from the machine, in a well ventilated area. Switch the charging circuit off before connecting or disconnecting the battery. When you have installed the battery in the machine, wait 5 min before connecting it up.

When reconnecting, attach the positive (+) lead first.

Warning Symbols

The following warning symbols may be found on the battery.

Figure 48.

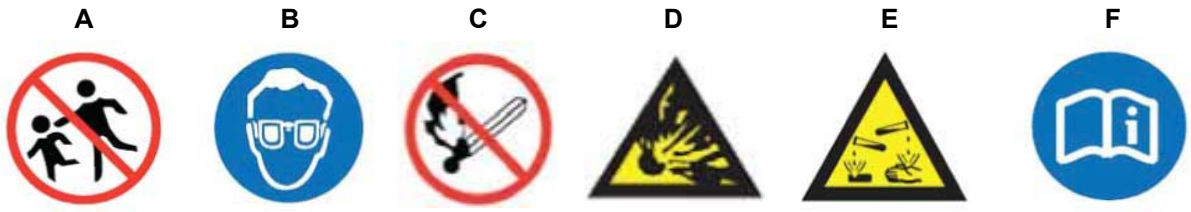

A Keep away from children
B Shield eyes
C No smoking, no naked flames, no sparks
D Explosive gas
E Battery acid
F Note operating instructions

Disposal

When the battery reaches the end of its usual life it must be removed from the machine and recycled in an approved way in accordance with local environmental regulations. This service is usually operated by battery vendors. Machine users that cannot find a suitable battery recycling facility should contact their JCB dealer for assistance.

First Aid - Electrolyte

Eyes

In the case of eye contact, flush with water for 15min. always get medical attention.

Swallowing

Do not induce vomiting. Drink large quantities of water or milk. Then drink milk of magnesia, beaten egg or vegetable oil. Get medical help.

Skin

Flush with water, remove affected clothing. Cover burns with a sterile dressing then get medical help.

Maintenance Schedules

General

⚠ **WARNING** Maintenance must be done only by suitably qualified and competent persons.

Before doing any maintenance make sure the machine is safe, it must be correctly parked on solid, level ground.

To prevent anyone starting the engine, remove the ignition key. Disconnect the battery (by means of the battery isolator if installed) when you are not using electrical power. If you do not take these precautions you could be killed or injured.

A badly maintained machine is a danger to the operator and the people working around the operator. Make sure that the regular maintenance and lubrication tasks listed in the service schedules are done to keep the machine in a safe and efficient working condition.

To ensure the correct functioning of the engine and emissions control system all operation and maintenance must be conducted in accordance with the instructions in this manual. Incorrect operation, maintenance or repair of the engine and emissions control system may lead to reduced product life, loss of performance or malfunctions. It is the machine owner's responsibility to ensure maintenance is conducted properly in accordance with the requirements in this manual.

Apart from the daily tasks, the schedules are based on the machine running hours. Keep a regular check on the hourmeter readings to correctly gauge the service intervals. When there is no hourmeter installed, use the calendar equivalents to determine the service intervals.

Do not use a machine which is due for a service. Make sure any defects found during the regular maintenance checks are corrected immediately.

More frequent checks of engine components than the engine manufacturer recommends do not invalidate emissions warranty.

How to Use the Maintenance Schedules

The schedules show the service tasks which must be done and their intervals

The 10h and 50h service tasks can be done by the operator. Details of how to do the service tasks are given in this manual and the schedules include a page reference. The remaining service tasks must be done by your JCB dealer.

The services must be done at either the hourly interval or the calendar equivalent, whichever occurs first.

The intervals given in the schedules must not be exceeded. If the machine is operated under severe conditions (high temperature, dust, water, etc.) shorten the intervals.

Table 11.

○	Service task can be completed by a competent operator. Details of how to complete the service task are given in the Operator's Manual.
□	We recommend that a Service Engineer completes the service task. Details of how to complete the service task are given in the Service Manual.

Maintenance Intervals

Table 12.

Interval (h)	Calendar Equivalent
10	Daily
50	Weekly
400	Six months
800	Yearly
2000	Two years

Pre-start Cold Checks, Service Points and Fluid Levels

Table 13.

Component	Task	10	50	400	800	2,000
Engine						
Oil Level	Check	○	○	□	□	□
Oil and Filter[2]	Change			□	□	□
Coolant Quality/ level	Check	○	○	□	□	□
Coolant or Oil Leaks	Check	○	○	□	□	□
Coolant System	Drain and Fill					□
Water Separator	Check for Contamination and Drain		○	□	□	□
Water Separator Element/ Fuel Filter	Change			□	□	□
Fuel Filter (inline)	Change			□	□	□
Fuel tank and filler	Drain/Clean			□	□	□
All Hoses - Condition	Check	○	○	□	□	□
Radiator	Clean			□	□	□
FEAD (Front End Accessory Drive) belt	Check (condition/tension)		○	□	□	□
FEAD belt	Change			□	□	□
Air Cleaner Outer Element[3]	Change			□	□	□
Air Cleaner Inner Element	Change				□	□
Air filter dust valve	Check	○	○	□	□	□
Valve Clearances[1, 4]	Check and adjust				□	
Injectors pressures[4]	Check				□	□
Fuel pipes and clamp bands	Check		○	□	□	□
Fuel pipes and clamp bands[4]	Change					□
Turbo charger[4]	Check (condition)					□
Injection Pump[4]	Check (condition)					□

(1) Check every 800h
(2) Engine oil and oil filter change at first 50h then every 400h thereafter
(3) If operating in dusty adverse working environments, do these jobs more frequently.
(4) These jobs must be done by a qualified engineer.

Table 14.

Component	Task	10	50	400	800	2,000
Drum and Steering						
Drum Scrapers	Clean	○	○	□	□	□
Drum Rubber Buffers	Check			□	□	□
Drum bearing[2]	Lubricate					
Drum Distance Spacers / Buffer[1]	Check/ Change(if necessary)		○	□	□	□
Articulation Joint	Check			□	□	□
Hydraulics						
Oil	Check (Level)	○	○	□	□	□
Oil	Replace					□

Component	Task	10	50	400	800	2,000
Oil Reservoir	Clean					☐
Oil Filter	Replace				☐	☐
Hoses - Damage or Leaks	Check	○	○	☐	☐	☐
Rams - Chrome condition, leaks, security	Check		○	☐	☐	☐
Electrics						
Battery charge indicator	Check			☐	☐	☐
Wiring for damage/routing	Check (Condition)		○	☐	☐	☐
Battery Mounting	Check (Condition)		○	☐	☐	☐
Battery Terminals for Condition and Tightness	Check (Condition)		○	☐	☐	☐
Bodywork and Cab						
Safety Decals/Notes	Check	○	○	☐	☐	☐
Cab Isolation Mounts	Check		○	☐	☐	☐
ROPS (Roll-Over Protective Structure)	Check (Condition)	○	○	☐	☐	☐
Seat Belt - Condition, operation and security (If fitted)	Check	○	○	☐	☐	☐
Machine Generally including paintwork	Check for Damage and Clean	○	○	☐	☐	☐

(1) Check the tightness of the bolts/screws every day for the first week (when machine is new), then thereafter every 400h.
(2) Drum bearing must be lubricated after 4,000h of operation.

Functional Tests and Final Inspection

Start the engine to do these maintenance tasks. Engine can be started, if the drive lever is in park brake position. It is not mandatory to occupy the operator seat before starting the engine.

Table 15.

Item	Operation	10h	50h	50h(1)	400h	800h	2,000h
Engine							
Idle Speed	Check and Adjust			☐	☐	☐	☐
Maximum No load condition.	Check			☐	☐	☐	☐
Exhaust smoke.	Check		○	☐	☐	☐	☐
Exhaust system security	Check			☐	☐	☐	☐
Air Inlet system security	Check			☐	☐	☐	☐
Throttle system and control cables	Check			☐	☐	☐	☐
Transmission and steering.							
Forward/ Reverse operation	Check			☐	☐	☐	☐
Vibration operation	Check	○	○	☐	☐	☐	☐
Steer circuit pressure	Check			☐	☐	☐	☐
Sprinkler system operation.	Check	○	○	☐	☐	☐	☐
Hydraulics							
Charge pressure	Check			☐	☐	☐	☐

Item	Operation	10h	50h	50h[1]	400h	800h	2,000h
Operation all services.	Check		O	□	□	□	□
Brakes							
Drive brake-operation	Check	O	O	□	□	□	□
Park brake -operation	Check	O	O	□	□	□	□
Electrics							
Starter Motor	Check			□	□	□	□
Alternator- Output	Check			□	□	□	□
All electrical equipments operation(e.g. warning lights, beacon, alarm, horn etc	Check	O	O	□	□	□	□
Operation of stop controls/ESOS (Engine Shut-Off Solenoid))	Check	O	O	□	□	□	□
Body and Framework							
Drum scrapers	Check	O	O	□	□	□	□
Operator's seat safety switch (if installed)	Check	O	O	□	□	□	□
Neutral start operation	Check	O	O	□	□	□	□

(1) First 50hrs service to be completed by your JCB dealer

Maintenance Positions

General

1. Park the machine on solid, level ground.
2. Install the articulation lock.
3. Move the drive lever to the neutral position.
4. Stop the engine and remove the ignition key.
5. Wait for the specified time to dissipate any residual hydraulic pressure.
   Duration: 30s
6. Disconnect the battery to prevent accidental operation of the machine.
7. If necessary, put blocks against the two sides of the drums before you get below the machine. Refer to Figure 49.
8. If you wish to arc weld the machine disconnect the alternator and electronic control units (if installed).

Figure 49.

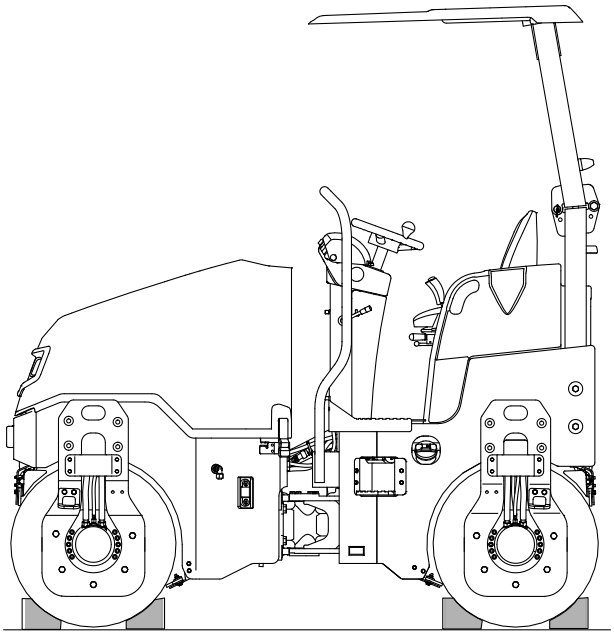

Service Points

General

Figure 50.

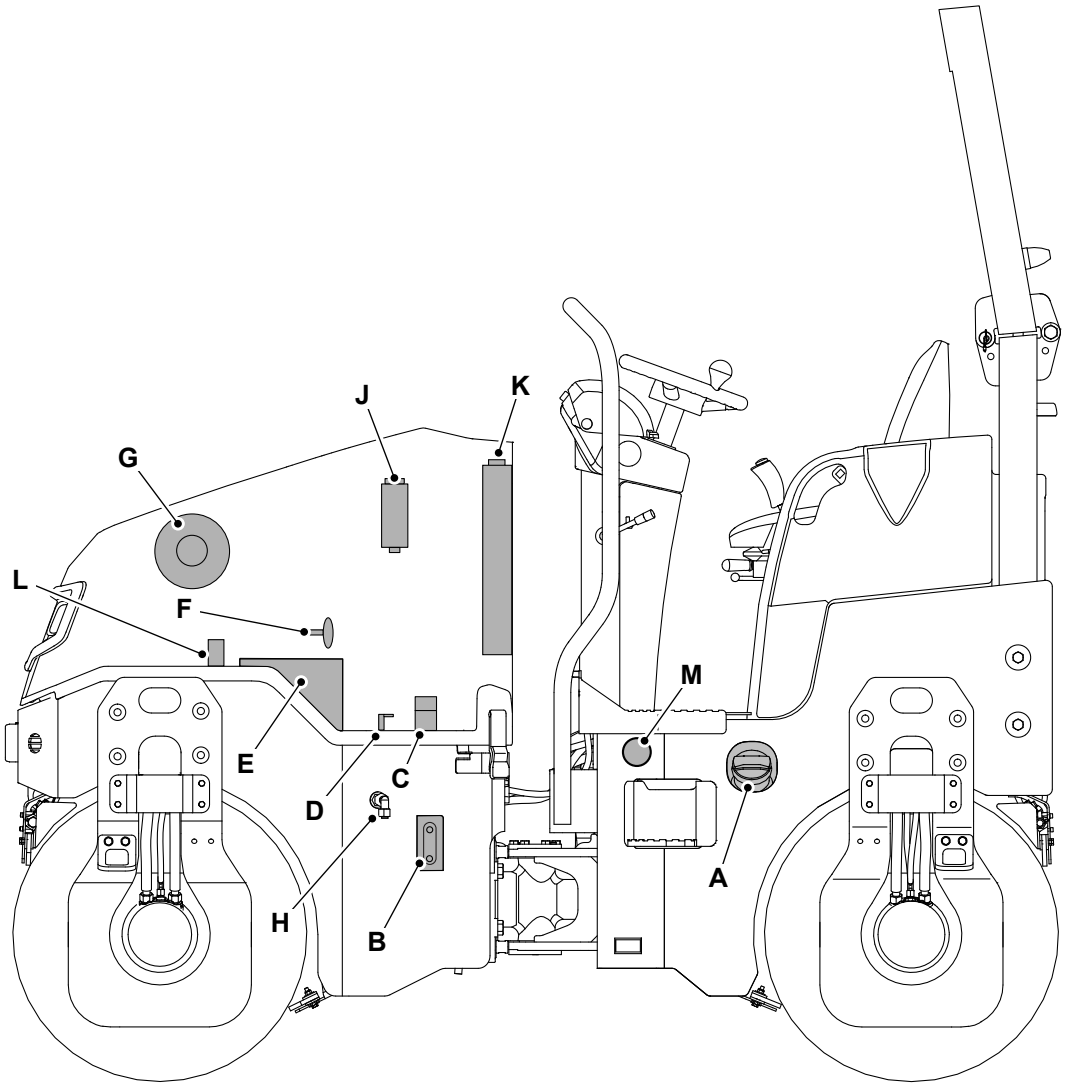

A Diesel fuel filler cap
B Hydraulic oil level indicator
C Hydraulic oil filler cap
D Battery isolator
E Battery
F Engine oil dipstick
G Air filter
H Engine oil drain
J Water separator/fuel filter
K Radiator
L Primary fuses
M Fuel filter (inline)

Figure 51.

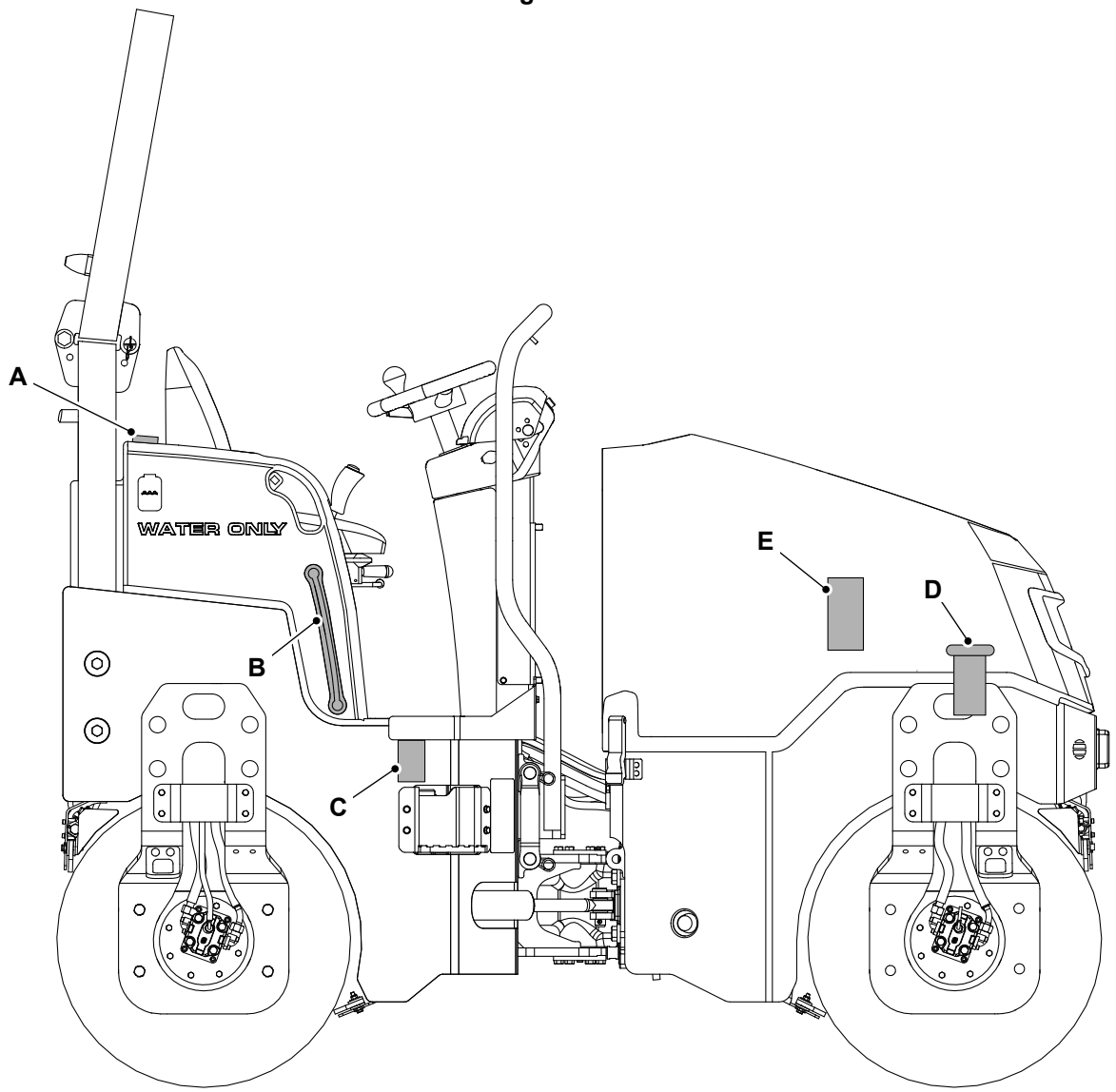

A Water tank filler cap
B Water level indicator
C Water filter
D Hydraulic filter
E Coolant recovery bottle

Access Apertures

Engine Compartment Cover

Most of the service points can be access through the engine compartment cover.

Open

1. Make the machine safe.
2. Park the machine on firm level ground.
3. Apply the parking brake (if installed).
4. Engage the articulation lock.
5. Stop the engine and turn the ignition key to the off position.
6. Remove the ignition key.
7. Unlock the latch connected to down left and right side of engine cover. Refer to Figure 52.
8. Use the handle to open the engine cover.
9. Open the cover, it is supported on the retainer rope.
10. Install the stay rod to prevent the bonnet from closing. Refer to Figure 52.

Figure 52.

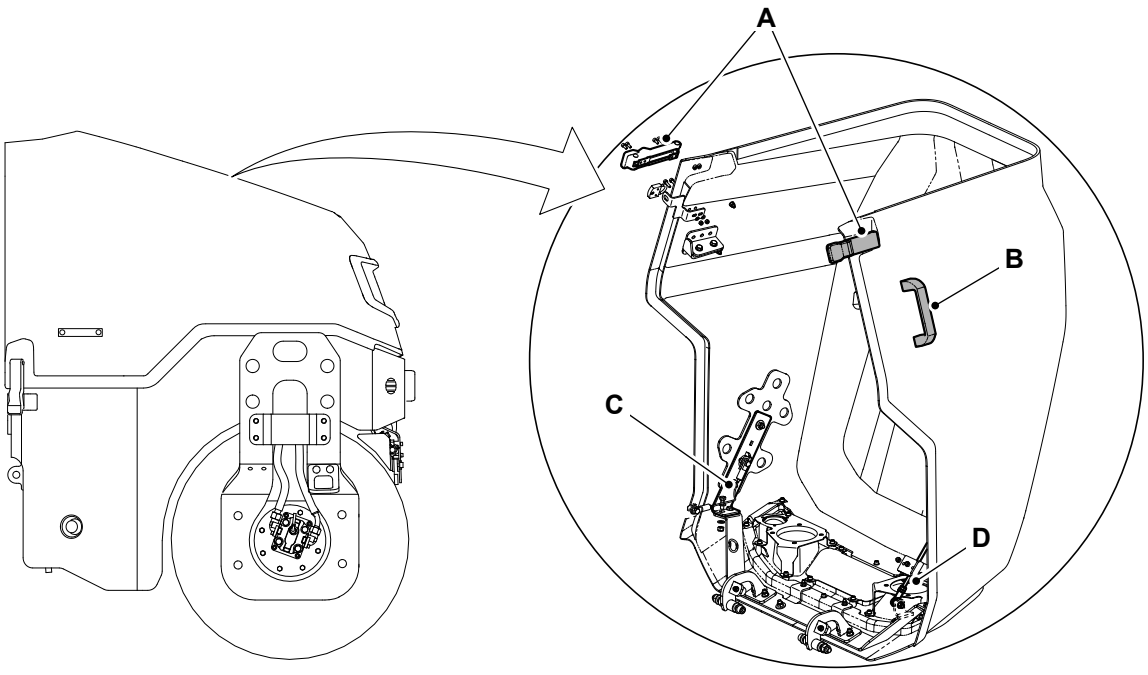

A Latch
B Handle
C Retainer rope
D Stay rod

Close

1. Remove the stay rod and put it back into the stowage position.
2. Pull the cover down using the handle.
3. Make sure that the cover is closed correctly.
4. Lock the latch connected to down left and right side of engine cover. Refer to Figure 52.

Tools

General

All tools must be kept in the tool bag when not in use. Your tool bag contains allen keys, tommy bar, and spanner.

Following tools are recommended for the routine maintenance:

Tommy bar (size 1/2") - It is required for ROPS (Roll-Over Protective Structure) folding and unfolding operation. Refer to: Loading the Machine onto the Transporting Vehicle/Trailer (Page 62).

Double end spanner (size 12-13) - It is required for the adjustment of scraper bars. Refer to: Check (Condition) (Page 113).

Allen key (size 6mm and 8mm) - It is required to release the brake manually for towing operation. Refer to: Retrieval (Page 55).

Double end spanner (size 30-32) - It is required for the adjustment of center joint. Refer to: Articulation Lock (Page 41).

Body and Framework

General

Check (Condition)

1. Make sure that all of the guards and protective devices are in position, secured by their locking devices and free from damage.
2. Inspect all of the steelwork for damage. Include the following:
   2.1. Examine all of the pivot point welds.
   2.2. Examine the condition of all the pivot pins.
   2.3. Check that the pivot pins are correctly in position and secured by their locking devices.
3. Check the steps and handrails are undamaged and correctly attached.
4. Check that the lamp lenses are undamaged.
5. Check that all of the safety and instructional labels are undamaged and in position. Install new labels where necessary.
6. Note any damaged paintwork for future repair.
7. Inspect the machine for broken or loose fasteners.

Operator Station

Operator Protective Structure

Check (Condition)

⚠ **WARNING** You could be killed or seriously injured if you operate a machine with a damaged or missing ROPS/FOPS/FOGS. If the ROPS/FOPS/FOGS has been in an accident, do not use the machine until the structure has been renewed. Modifications and repairs that are not approved by the manufacturer may be dangerous and will invalidate the ROPS/FOPS/FOGS certification.

A failure to adhere to these precautions can cause death or injury to the operator. For assistance, contact your JCB dealer.

1. Make the machine safe.
   Refer to: Maintenance Positions (Page 87).
2. Check the structure for damage.
3. Make sure that all of the ROPS mounting bolts are undamaged and in position.
4. Make sure that the ROPS mounting bolts are tightened to the correct torque setting.
   Refer to: Torque Values (Page 141).

Seat

Check (Condition)

1. Check that the seat adjustments operate correctly.
2. Check the seat is undamaged.
3. Check the seat mounting bolts are undamaged, correctly installed and tight.
4. Make sure the seat is clear from unwanted materials and hazards at all times.

Seat Belt

Check (Condition)

⚠ **WARNING** When a seat belt is installed on your machine replace it with a new one if it is damaged, if the fabric is worn, or if the machine has been in an accident.

WARNING If the seat belt does not 'lock' when you check if the seat belt is operating correctly, do not drive the machine. Get the seat belt repaired or replaced immediately.

1. Make sure the seat belt can be adjusted.
2. Examine the seat belt for signs of fraying and stretching.
3. Check that the stitching is not loose or damaged.
4. Check that the belt mounting bolts are undamaged, correctly installed and tight.
5. Check that the buckle assembly is undamaged and operates correctly.

Controls

Check (Operation)

Check the operation of the non-hydraulic and non-electrical operator station controls.

Safety Equipment

Check (Operation)

Neutral Start

1. Enter into the machine.
2. Wear the seat belt.
3. Put the drive lever in park brake position and start the engine. If the engine fail to start, contact your local JCB dealer to rectify the faults.
4. Put the drive lever in forward or reverse position and start the engine. If the engine start, contact your local JCB dealer to rectify the faults.

Operator Seat Switch

1. Enter into the machine.
2. Sit on the operator seat.
3. Put the drive lever in park brake and start the engine.
4. Operator seat switch icon on the instrument panel should be extinguished.
5. If the operator seat switch still illuminate, contact your local JCB dealer to rectify the faults.
6. If the drive lever is not in park brake position and operator seat is not occupied then the engine will cut off with in specified time.

   Duration: 2s

Emergency Stop Button

Press the emergency stop switch on the steering column and the engine will be stopped. If any controls are still functional, contact your local JCB dealer to rectify the faults immediately. Do not use the machine until the fault is rectified.

Engine

General

Check (Condition)

Start the engine and check for:

- Excessive smoke
- Excessive vibration
- Excessive noise
- Overheating
- Performance
- Unusual smells.

Oil

Check (Leaks)

Before you start the machine, do a check for oil leaks:

1. Make the machine safe.
2. Get access to the engine compartment (if applicable)
3. Check the engine and the area below for oil leaks.
4. Close the engine cover (if applicable).
5. If necessary, contact your JCB dealer.

Check (Level)

⚠ **WARNING** Never check the oil level or add oil with the engine running. Be careful of hot lubricating oil. Danger of scalding.

Notice: Do not exceed the maximum level of engine oil in the sump. If the maximum is exceeded, the excess must be drained to the correct level. An excess of engine oil could cause the engine speed to increase rapidly without control.

1. Make the product safe.
   Refer to: Maintenance Positions (Page 87).
2. Wait for the oil to drain back into the engine sump before you take a reading. If not, a false low reading may be recorded which can cause the engine to be overfilled.
3. Get access to the engine compartment (if applicable).
   Refer to: Access Apertures (Page 90).
4. Remove and clean the dipstick.
   Refer to: Service Points (Page 88).
5. Replace the dipstick.
6. Remove the dipstick.
7. Check the oil level. The oil should be between the two marks on the dipstick.
8. If necessary, add more oil:
   8.1. Remove the filler cap.
   Refer to: Service Points (Page 88).
   8.2. Add the recommended oil slowly through the filler point

Refer to: Fluids, Lubricants and Capacities (Page 135).

8.3. Replace the dipstick.

8.4. Remove the dipstick.

8.5. Check the oil level, if necessary add more oil.

8.6. Replace the dipstick

8.7. Replace the filler cap.

9. Close and secure the engine cover (if applicable).

Replace

⚠ **WARNING** Before draining the oil make sure you loosen the oil filler plug or the breather (if installed), and wait until the internal pressure is completely released. Remove the oil draining plug and drain oil only when the pressure is completely released.

CAUTION Keep your face away from the drain hole when removing the drain plug.

CAUTION It is illegal to pollute drains, sewers or the ground. Clean up all spilt fluids and/or lubricants.

Used fluids and/or lubricants, filters and contaminated materials must be disposed of in accordance with local regulations. Use authorised waste disposal sites.

Remote Oil Drain

Remote oil drain plug is located on the left hand side of the front frame. Refer to Figure 53.

Figure 53.

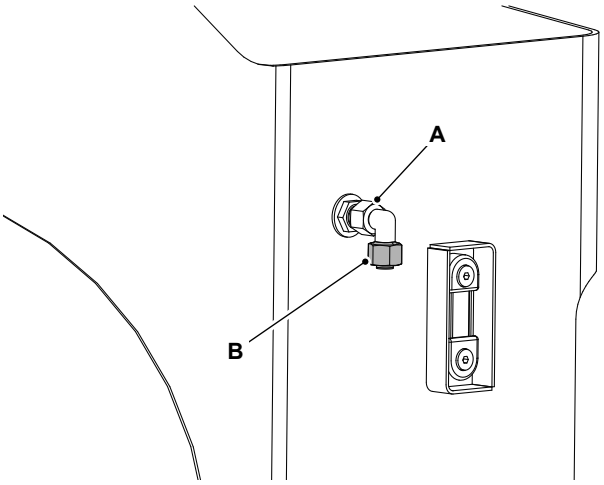

A Drain fitting **B** Drain plug

1. Make the machine safe.
   Refer to: Maintenance Positions (Page 87).
2. Put a container with of a specific capacity below the drain fitting.
   Volume: 20L
3. Remove the plug from the drain fitting and allow the oil to drain into the container. Refer to Figure 53.
4. Clean and install the plug.

Replace the Oil Filter

Figure 54.

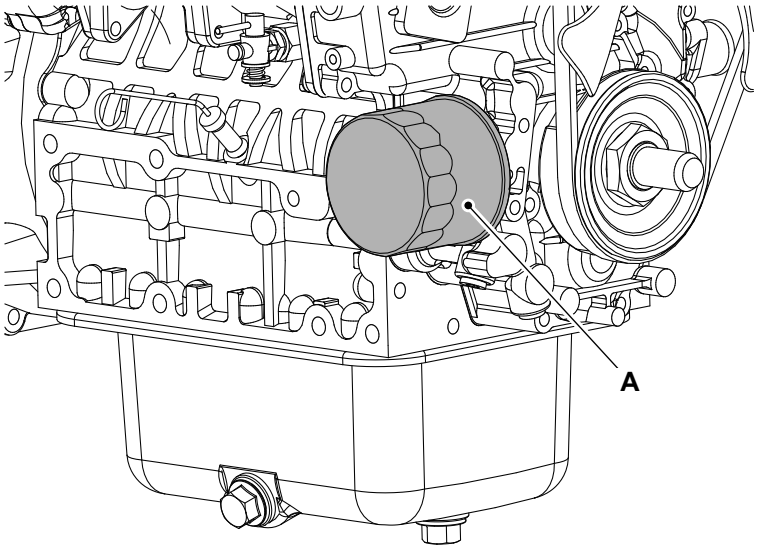

A Filter canister

1. Make the machine safe.
   Refer to: Maintenance (Page 75).
2. Get the access to the engine compartment.
   Refer to: Engine Compartment Cover (Page 90).
3. Drain the oil.
   3.1. Put the suitable size of a container below the remote oil drain plug. Refer to Figure 53.
   3.2. Remove the drain plug.
   3.3. Remove and discard the O ring.
   3.4. Let the oil drain out, then clean and install the drain plug with a new O ring.
4. Remove the filter canister, use a chain wrench if necessary. Refer to Figure 54.
5. Clean the seal face of the filter head.
6. Install the filter canister. Refer to Figure 54.
   6.1. Smear the seal on the new filter canister with clean engine oil.
   6.2. Screw the filter on until it just contacts the filter head.
   6.3. Turn the filter at least a further 3/4 of a turn.
7. Through the top filler point, fill the engine with the recommended oil to the MAX mark on the dipstick. Wipe off any spilt oil, refit the filler cap and make sure it is secure.
8. Operate the engine until the oil pressure low warning light has extinguished. Check for oil leakage. When the oil has cooled, check the oil level again, and if necessary top up with clean engine oil.
9. Close the engine cover.

Front End Accessory Drive (FEAD) Belt

Check (Condition)

⚠ **WARNING** Do not try to turn the engine by pulling the fan or fan belt. This could cause injury or premature component failure.

CAUTION Make sure the engine cannot be started. Disconnect the battery before doing this job, otherwise you could be injured.

Figure 55.

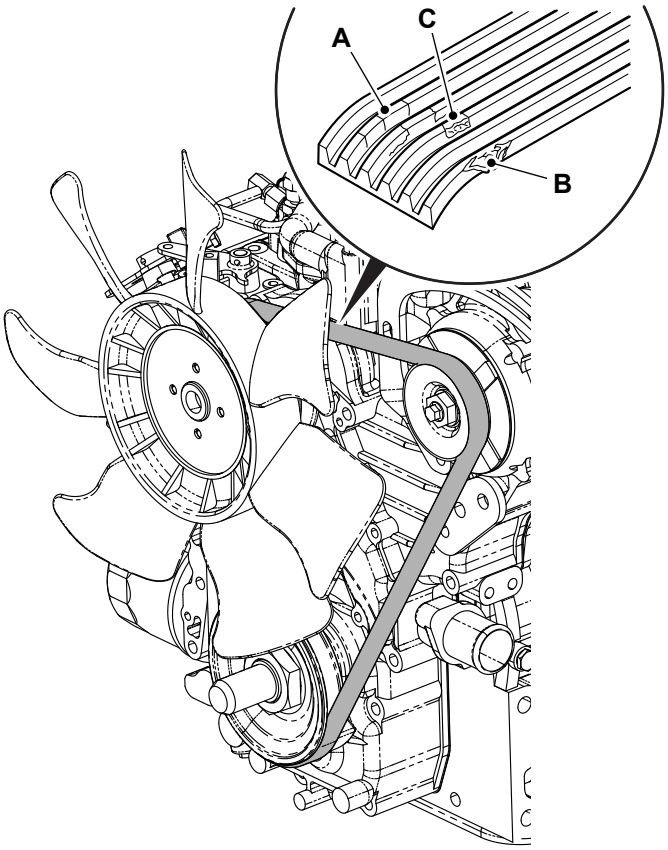

A Cracks
B Fraying
C Missing pieces

1. Make the machine safe.
   Refer to: Maintenance Positions (Page 87).
2. Inspect the belt for cracks, fraying or missing pieces.
3. If necessary, install the new drive belt.
   Refer to: Replace (Page 100).

Replace

Figure 56.

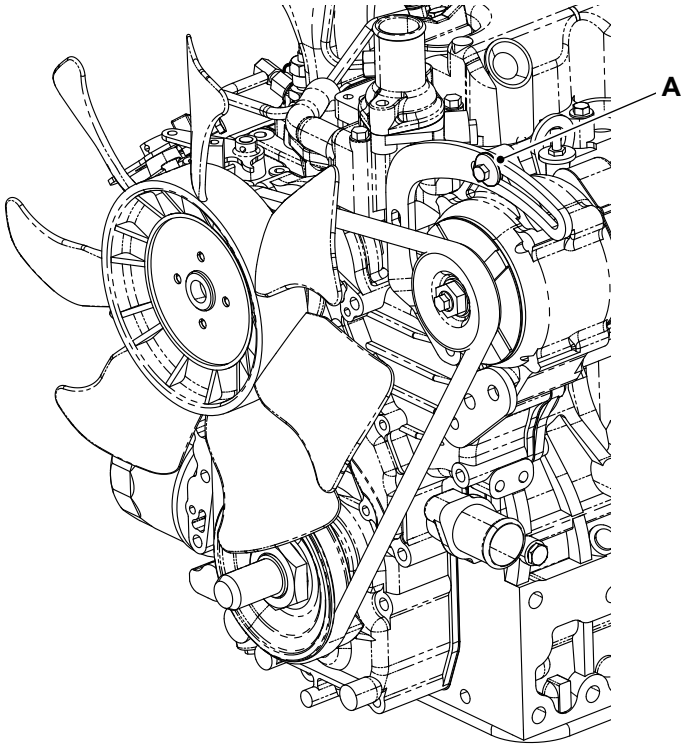

A Drive belt adjustment bolt

1. Make the machine safe.
2. Open the engine compartment cover.
3. Loosen the alternator mounting bolts.
4. Remove the alternator drive belt adjustment bolt and the protective cover.
5. Remove the alternator drive belt.
6. Install the new drive belt around the pulleys.

Exhaust

Check (Condition)

Check that there are no exhaust system components missing.

Check that none of the components are excessively corroded.

Check that there are no leaks in the exhaust system.

Check that the exhaust system is secure.

Air Filter

General

Check (Condition)

⚠ **Notice:** Do not modify or install non JCB approved components to the engine induction system, otherwise the engine emissions will be compromised.

1. Make the machine safe.
2. Get access to induction system.
3. Check the system hoses for:
   - 3.1. Condition.
   - 3.2. Damage.
   - 3.3. Security.
4. Replace the system hoses if necessary.

Outer Element

Replace

⚠ **Notice:** The inner element of the engine air filter must be replaced with a new one. Do not attempt to clean or wash the old element.

Notice: Clean the outer element when the air filter warning light illuminates on the instrument panel. The outer element must be cleaned twice only.

Notice: Do not run the engine with the air filter element removed.

Figure 57.

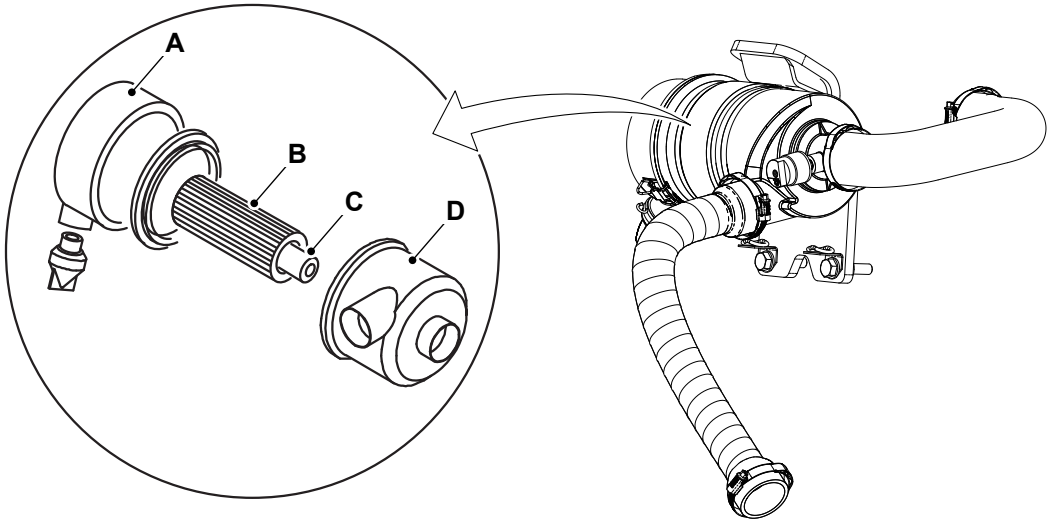

A Cover
B Outer element
C Inner element
D Canister

1. A new inner element must be fitted at least every second time the outer element is changed. As a reminder, mark the inner element with a felt tipped pen each time the outer element is changed.
2. Make the machine safe.
3. Stop the engine and remove the starter key.
4. Open the engine cover.

5. Identify the air filter.
6. Disconnect the scavenge hose from the cover and remove the cover.
7. Remove outer element.
8. If necessary, remove the inner element.
   8.1. You must not tap or knock the element.
9. Clean the inside of cover and canister.
10. Carefully insert the new inner element into the canister.
11. Make sure it seats correctly and check the seal is fully seated.
12. Insert a new outer element into the canister, check seal is fully seated.
13. Put the cover and assemble the scavenge hose.
14. Push the cover firmly into position and make sure it is secured.
15. Check all hoses for condition and tightness.
    15.1. Never try to replace hose with any other pipe/ hose. The machine can catch fire if incorrect parts are fitted. Contact JCB service dealer for details.

Dust Valve

Check (Condition)

- Check the dust valve for rips/tears.
- Check there are no obstructions.
- Check that the dust valve is free of dirt and dust.
- Check that the dust valve securely attached to the air filter housing.

Fuel System

General

Bleed

⚠ **WARNING** Do not open the high pressure fuel system with the engine running. Engine operation causes high fuel pressure. High pressure fuel spray can cause serious injury or death.

Fuel Injection System

1. Make the machine safe.
   Refer to: General (Page 87).
2. Loosen the vent screw on the fuel injection pump.

Figure 58.

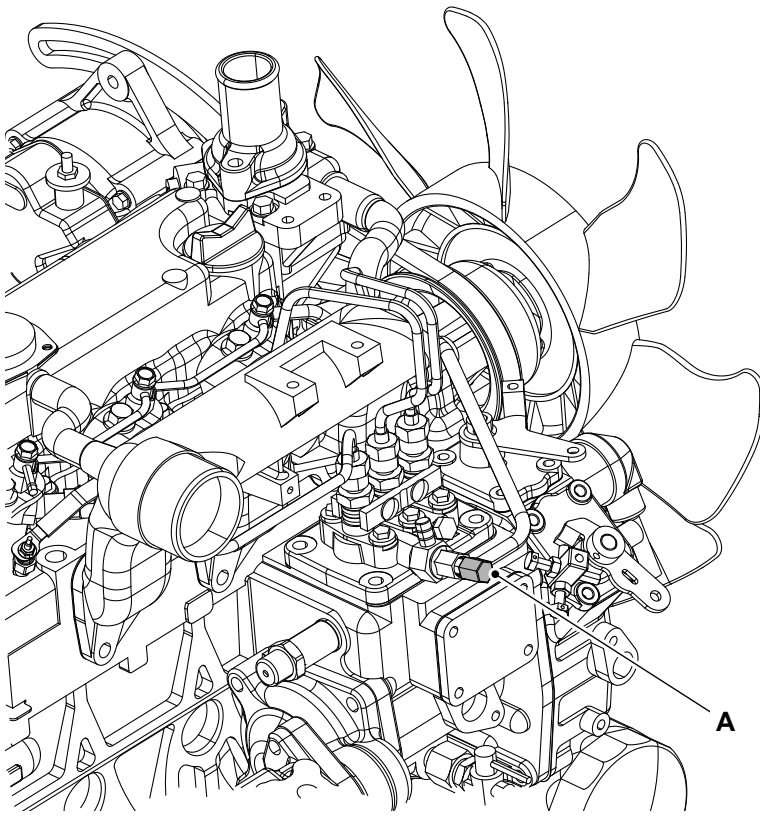

A Vent screw

3. Operate the fuel lift pump priming button until air free fuel exits from the vent screw. Refer to Figure 59.

Figure 59.

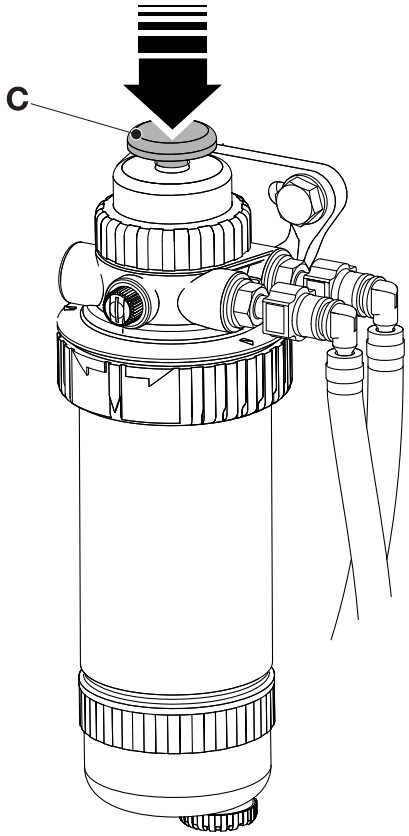

C Priming button

4. The engine is now ready to start. If the engine runs smoothly for a short time and then begins to run roughly, leave at idle until it runs smoothly.
   4.1. If the engine continues to run roughly, check again for air in the fuel system.
   4.2. If the fault persists contact your nearest JCB dealer.

Check (Leaks)

1. Make the machine safe.
2. Get access to the engine compartment.
   Refer to: Access Apertures (Page 90).
3. Check the engine compartment, fuel lines and the area below for leaks.
4. Start the engine.
5. While the engine is running check the engine compartment, fuel lines and the area below for leaks.
6. If necessary, contact your JCB dealer.

Tank

Clean

Draining Fuel Tank

1. Make the machine safe.

Refer to: Maintenance Positions (Page 87).

2. Remove the fuel cap on the fuel tank. Refer to Figure 60.
3. Put a suitable container below the drain plug on the right hand side of the rear chassis. Do not confuse with the hydraulic tank drain plug. Refer to Figure 60.

Figure 60.

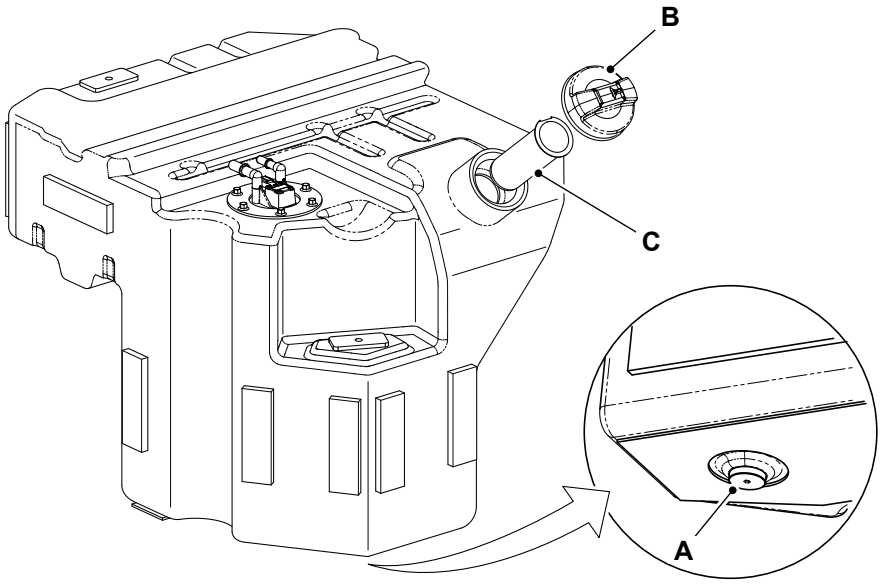

A Drain plug
B Fuel cap
C Filler screen

4. Remove the drain plugs and drain the fuel from the fuel tank.
5. Flush the fuel tank with diesel fuel.
6. Install the drain plugs.
7. Remove the filler screen, clean the filler screen with diesel fuel. Refer to Figure 60.
8. Install the filler screen.
9. Fill the fuel tank and check for leaks.
10. Install the fuel cap on the fuel tank.

Pre-Filter Element

Replace

1. Make the machine safe.
   Refer to: Maintenance Positions (Page 87).
2. Open the panel to get access to the pre-filter. Refer to Figure 61.
3. Clean the outside of the filter and around the hose.
4. Place a suitable container to catch any fuel.
5. Make a note of which way round the filter is installed. Loosen the pipe clips and remove the pipe from both ends of the pre-filter.
6. Replace the pre-filter. Refer to Figure 61.

7. Make sure that the filter is fitted the correct way round. There may be an arrow on the filter body to indicate the direction of flow.
8. Tighten the pipe clips. Do not overtighten the pipe clips.
9. Make sure that any spilled fuel is cleaned up.
10. Bleed the fuel system.
    Refer to: Bleed (Page 103).
11. Run the engine and make sure that there are no fuel leaks.

Figure 61.

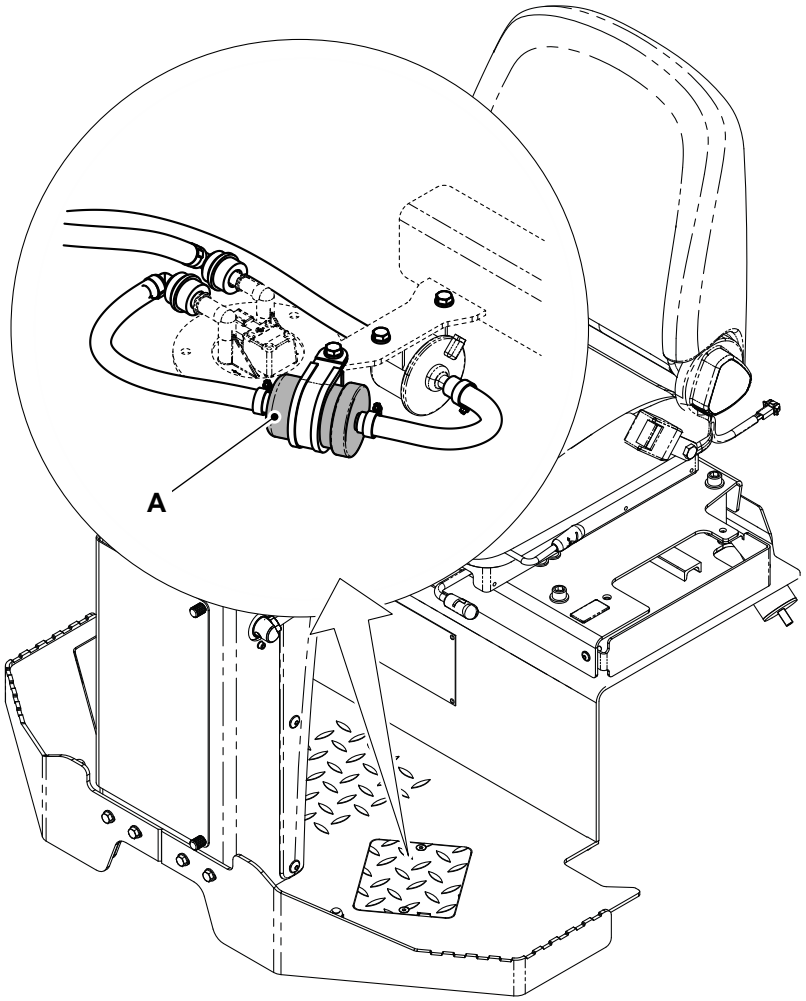

A Pre-filter

Fuel Filter

Replace

1. Make the machine safe.
   Refer to: Maintenance Positions (Page 87).
2. Open the engine cover to get access to the fuel filter.
3. Clean the outside of the filter housing and around the filter head.
4. Drain the trapped water from the bowl.

5. Remove the bowl and electrical connection (if any).
6. Place a suitable container to catch any fuel. Remove the filter element. Refer to Figure 62.
7. Clean around the filter base seal area.
8. Apply a thin film of oil on the gasket surface of the new filter.
9. Fill the filter element with clean fuel before installing.
10. Install the filter element onto the filter head until the gasket contacts the head. Hand tighten the filter an additional one half to three quarter of a turn.
11. Install the bowl.
12. Bleed the fuel system.
    Refer to: Bleed (Page 103).
13. Run the engine and make sure there are no fuel leaks.

Figure 62.

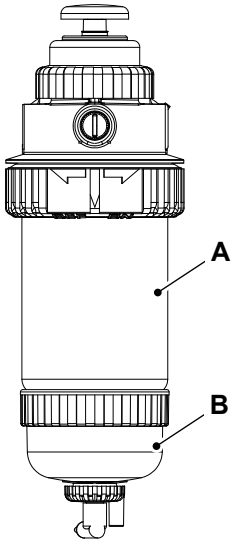

A Filter element **B** Bowl

Water Separator

Clean

1. Make the machine safe.
   Refer to: Maintenance Positions (Page 87).
2. Open the engine compartment cover to get access to the filter.
3. Examine the water separator bowl for sediment.
   3.1. If there is water but no sediment, open the tap to drain the water.
   3.2. If there is any sediment in the bowl, replace the fuel filter element.

Figure 63.

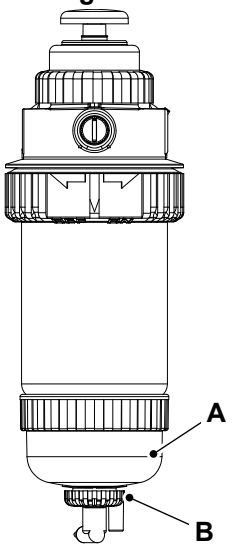

A Bowl

B Tap

Cooling System

General

Check (Leaks)

Before you start the machine, inspect the system for leaks:

1. Make the machine safe.
   Refer to: Maintenance Positions (Page 87).
2. Get access to the cooling pack.
   Refer to: Access Apertures (Page 90).
3. Check the cooling system for leaks.
4. If necessary, contact your JCB dealer.

Coolant

Check (Condition)

Refer to: Coolant (Page 139).

Check (Level)

⚠ **CAUTION** The cooling system is pressurised when the coolant is hot. When you remove the cap, hot coolant can spray out and burn you. Make sure that the engine is cool before you work on the cooling system.

1. Make the machine safe.
2. Let the engine cool.
3. Get access to the top of the radiator.
   Refer to: Service Points (Page 88).
4. Check the coolant level in the coolant recovery bottle.
   4.1. Carefully loosen the radiator cap and let the pressure release from the system.
   Refer to: Service Points (Page 88).
   4.2. Remove the radiator cap.
   4.3. Add the recommended coolant up to the maximum mark.
   Refer to: Fluids, Lubricants and Capacities (Page 135).
   4.4. Install the radiator cap.
5. Start the engine and run the engine up to operating temperature.
6. Stop the engine.
7. Remove the ignition key.
8. Check for leaks.

Replace

⚠ **CAUTION** The cooling system is pressurised when the coolant is hot. When you remove the cap, hot coolant can spray out and burn you. Make sure that the engine is cool before you work on the cooling system.

Figure 64.

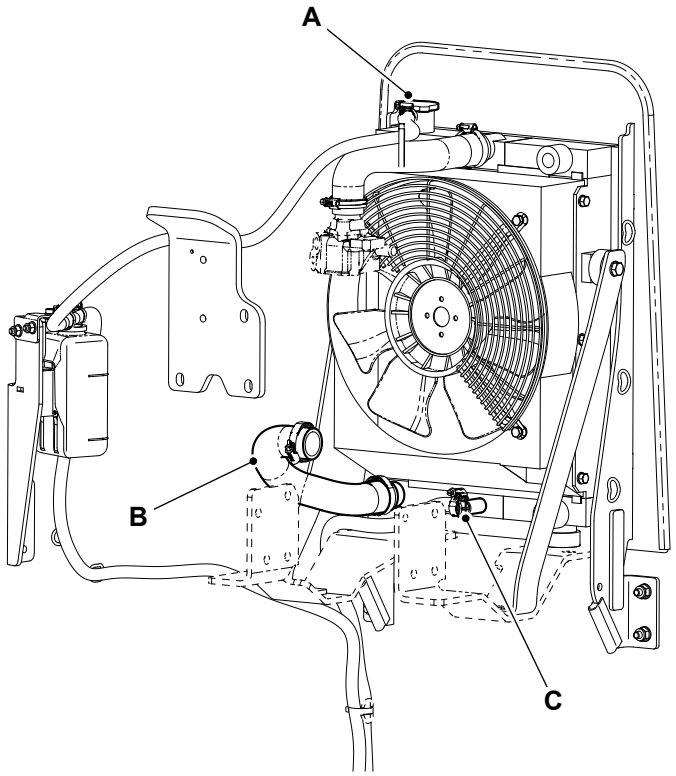

A Radiator cap
B Bottom radiator hose
C Drain valve

1. Make the machine safe.
   Refer to: Maintenance Positions (Page 87).
2. Open the engine compartment cover.
3. Carefully remove the radiator cap. Let any pressure escape before removing the cap. Refer to Figure 64.
4. Put the suitable size of container below the drain valve or bottom radiator hose.
5. Open the drain valve or remove the bottom radiator hose to drain the coolant. Refer to Figure 64.
6. Flush the system with clean water. After flushing, close the drain valve and install the radiator bottom hose.
7. Use the necessary mix of clean, soft water and antifreeze. Fill the cooling system.
   Refer to: Fluids, Lubricants and Capacities (Page 135).
   7.1. Do not fill the machine at more than 5 litres per minute. If the fill rate is any higher than this there is a possibility of air trapped in the system.
8. Install the filler cap and make sure it is tight.
9. Run the engine to raise the coolant to working temperature and pressure.
10. Stop the engine, checks for leaks and re-check the coolant level and top up if necessary.

Cooling Pack

Clean

1. Make the machine safe.
   Refer to: Maintenance Positions (Page 87).

2. Let the engine cool.
3. Get access to the cooling pack.
   Refer to: Access Apertures (Page 90).
4. If necessary, use a soft bristle brush or compressed air to remove all debris from the cooling pack.

Check (Condition)

1. Make the machine safe.
   Refer to: Maintenance Positions (Page 87).
2. Let the engine cool.
3. Get access to the cooling pack.
   Refer to: Access Apertures (Page 90).
4. Check the condition of the hoses, radiator and fan for:
   4.1. Condition.
   4.2. Damage.
   4.3. Security.
5. Replace the system hoses/radiator if necessary.

Brakes

Park Brake

Check (Operation)

⚠ **WARNING** Before testing the park brake make sure the area around the machine is clear of people.

WARNING Do not use a machine with a faulty park brake.

When the park brakes are applied the LED (Light Emitting Diode) on the instrument panel will illuminate. The engine can only be started when the drive lever is in park brake position.

Pushing the emergency stop switch will stop the engine causing the pressure in the braking system to fall and the brakes to be applied.

1. Make sure your seat belt is securely fastened.
2. Drive the machine to a suitable slope.
   Refer to: General (Page 48).
3. Engage the park brake. Machine should not move.

If the machine moved during the test, drive the machine to a suitable flat location and contact your JCB dealer to inspect the park brake. Do not use the machine until the fault is rectified.

Drum

Scraper

Check (Condition)

Smooth Drum Scraper

The scrapers are designed for use when rolling asphalt and in conjunction with the sprinkler system.

If earth is being compacted the scrapers should be released from the drum.

1. Make the machine safe.
   Refer to: Maintenance Positions (Page 87).
2. Check the correct distance between the drum and the scraper.
3. If necessary, loosen the fasteners on the scraper and set to the correct distance.
   Refer to: General (Page 92).
4. Tighten the fasteners to the correct torque value.
   Refer to: Torque Values (Page 141).
5. Repeat steps 2 to 4 for the other scrapers.

Figure 65.

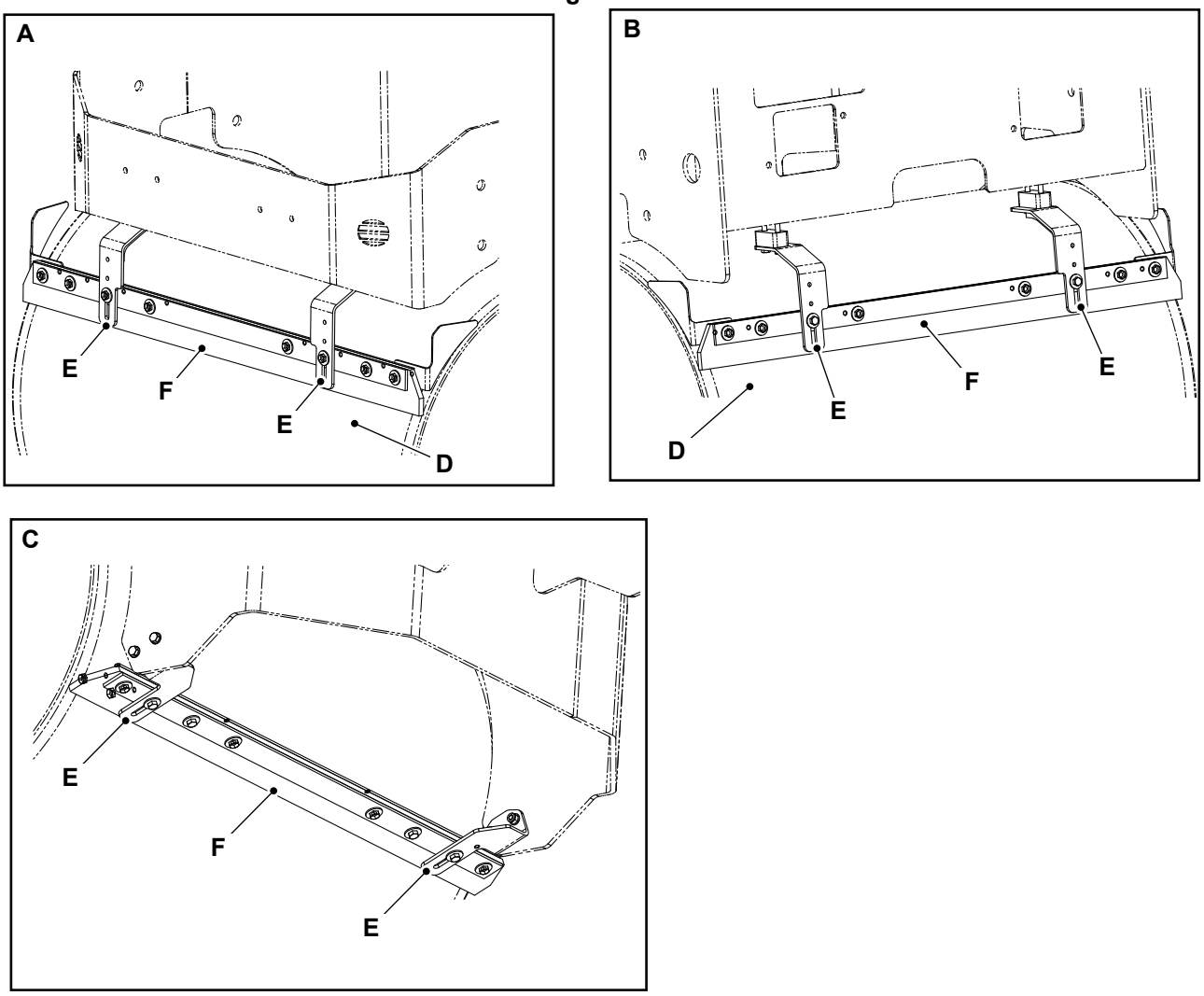

A Front side scraper
B Rear side scraper
C Bottom side scraper
D Drum
E Fasteners
F Scraper

Clean

Clean

Make the machine safe. Refer to: Maintenance Positions (Page 87).

Remove the dirt and debris with the clean water.

Sprinkler System

Water Tank

Check (Level)

⚠ **CAUTION** Antifreeze can be harmful. Obey the manufacturer's instructions when handling full strength or diluted antifreeze.

The sprinkler water tank level indicator gauge and filler cap are located at the right hand side of the operator seat. Make sure to use the antifreeze in the water tank while operating the machine in extremely cold climate.

1. Make the machine safe.
2. Check the water level indicator gauge, if necessary fill the tank through filler cap.

Figure 66.

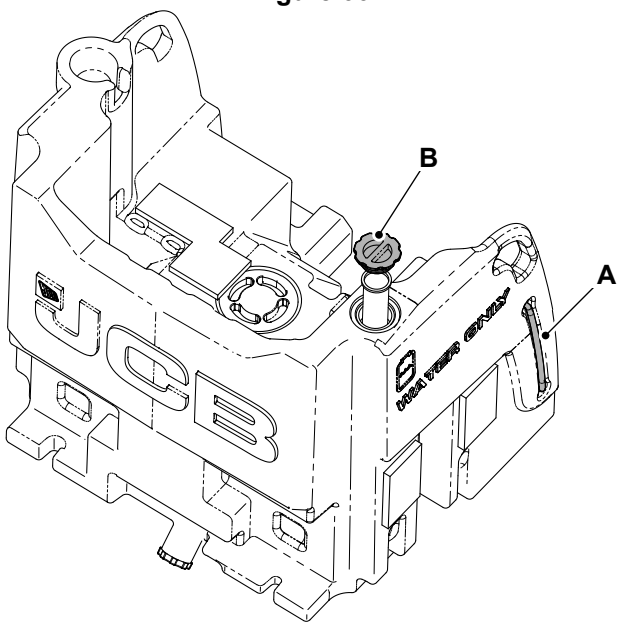

A Water level indicator gauge **B** Filler cap

Clean

The sprinkler system drain cap is located at the rear of the machine. Refer to Figure 67.

To drain the sprinkler system:

1. Make the machine safe.
2. Remove the water tank filler cap.
3. Open the drain cap and drain the tank.
4. Check the O-ring located on the drain cap. If necessary, replace the O-ring.
5. Close the drain cap.
6. Install the water tank filler cap. Refer to Figure 67.

Figure 67.

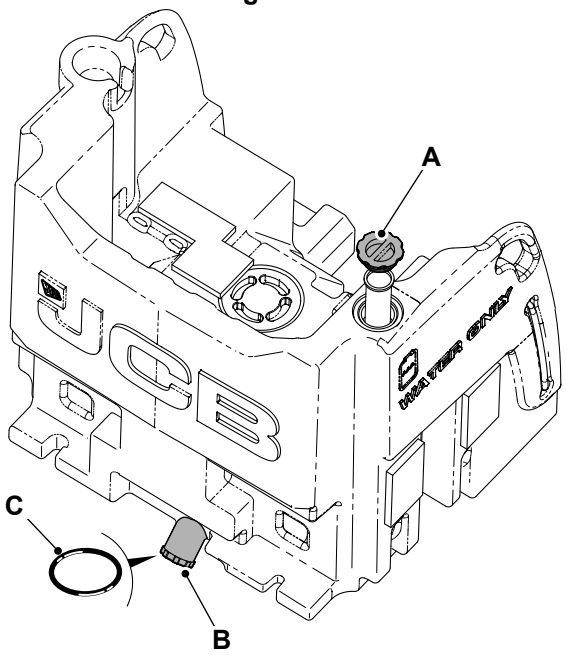

A Filler cap
B Drain cap
C O-ring

Cleaning of Sprinkler Pipe and Nozzle

To clean the sprinkler system, proceed as follows:

1. Make the machine safe.
   Refer to: Maintenance Positions (Page 87).
2. Drain the water tank.
3. Remove the water filter element.
   Refer to: Replace (Page 118).
4. Open the drain tap. Refer to Figure 68.
5. Insert a hose into the water tank and the spray pipes and flush the system through with clean water.
6. Remove the sprinkler nozzles and clean with clean water.
7. Close the drain tap.
8. Install the nozzles.
9. Install the water filter element.
10. Fill the water tank to the correct level.

Figure 68.

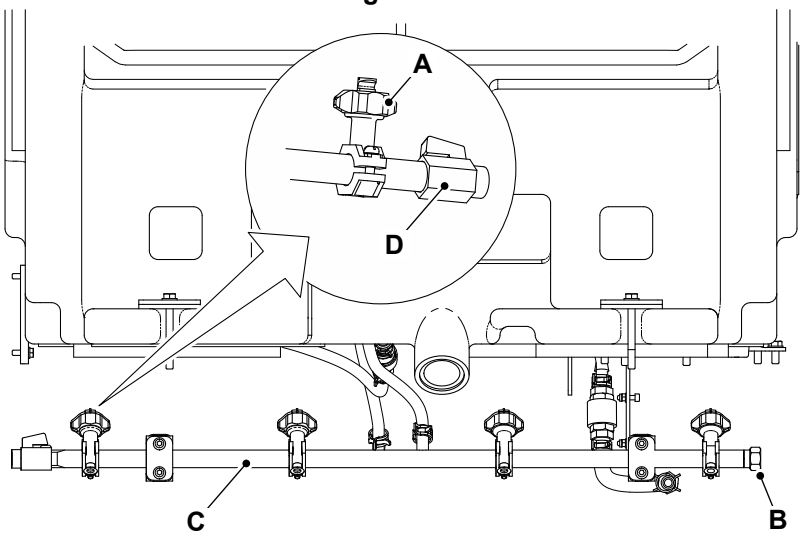

A Nozzle
B End cap
C Sprinkler/spray pipe
D Drain tap

Draining of Water at Pump

1. Make the machine safe.
   Refer to: General (Page 87).
2. Get access to the water pump. Refer to Figure 69.

Figure 69.

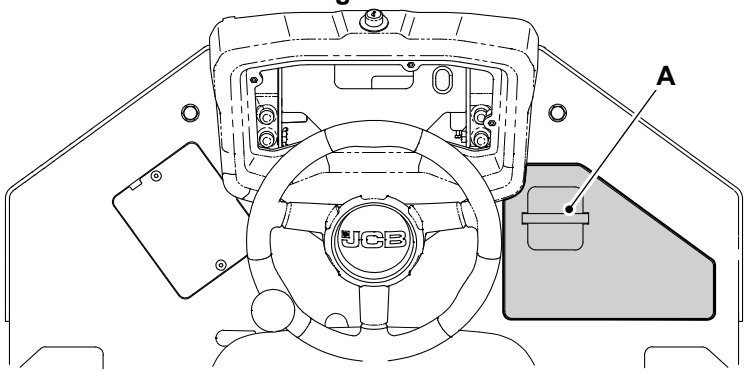

A Access panel

3. Push the lever to disconnect the hoses from the pump. Refer to Figure 70.

Figure 70.

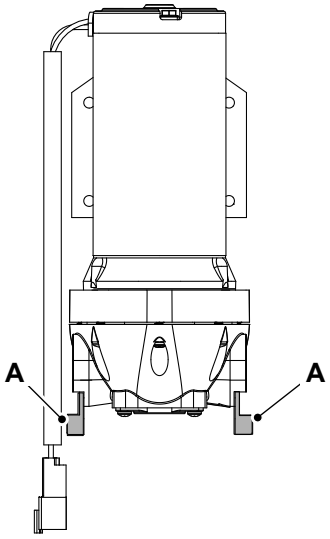

A Lever

4. Drain the trapped water from hoses.
5. Connect the hoses.

Draining at Water Sprinkler Coupler

1. Make the machine safe.
   Refer to: General (Page 87).
2. Get access to the water sprinkler coupler. Coupler is located between articulation joint.

Figure 71.

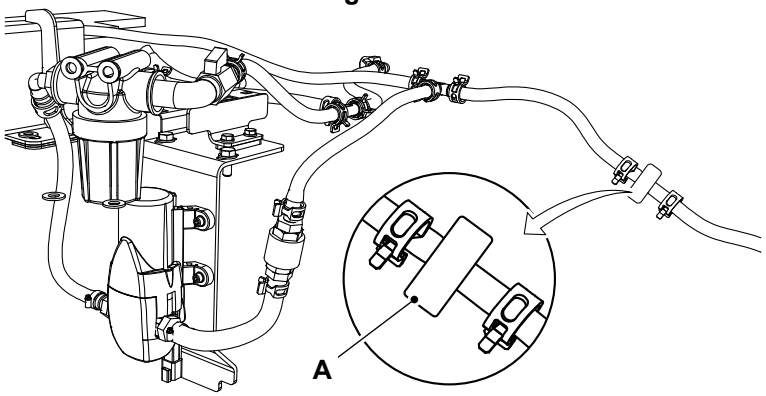

A Coupler

3. Open the coupler.
4. Drain the trapped water from the hoses.
5. Close the coupler.
6. Make sure that the coupler is tighten correctly. Hand tight only.

Water Filter Element

Replace

The sprinkler system water filter element is located under the rear frame, below the water tank.

1. Make the machine safe.
   Refer to: Maintenance Positions (Page 87).
2. Drain the water tank.
   Refer to: Clean (Page 115).
3. Open the panel to get access to the filter element. Refer to Figure 72.
4. Remove the water filter bowl.
5. Remove and discard the filter element.
6. Install the new filter element.
7. Check the seal on the filter element bowl. If necessary, replace the seal.
8. Install the filter bowl onto the filter head. Hand tight only.
9. Fill the water tank and operate the sprinkler system.
10. Check the filter for leaks.

Figure 72.

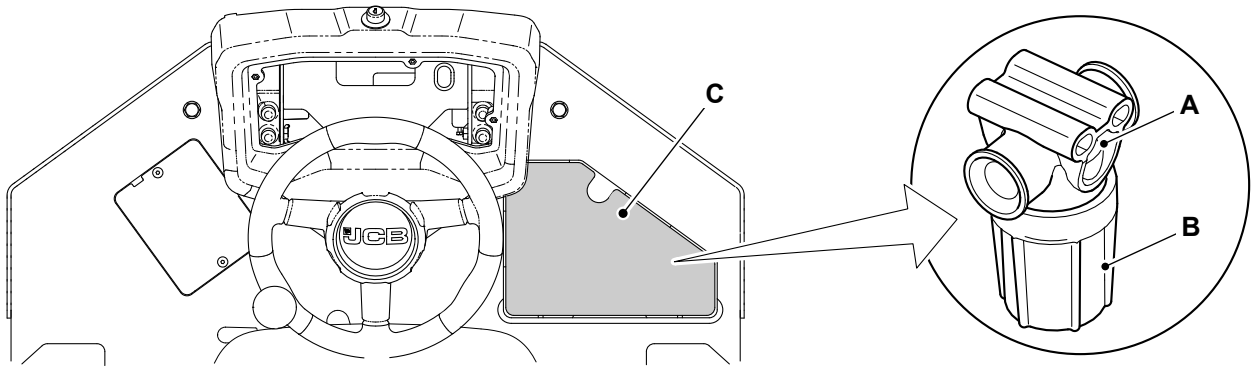

A Filter head
B Filter element
C Access panel

Vibration System

General

Grease

Grease lubricated shaft machines only.

Changing the Vibration Shaft Grease

Do not use vibration oil in grease lubricated shaft drums.

These drums are installed with lifetime grease only from the factory and it is maintenance free. The lifetime grease need only be replaced following dismantling and reassembly of the drum shaft. During re-assembly use only JCB Special Grease.

The lifetime grease installed from the factory is brown in colour. JCB Special Grease is blue in colour.

Hydraulic System

General

Discharge

1. Park the machine on firm level ground.
2. Stop the engine.
3. Turn the ignition to the off position.
4. Remove the starter key.
5. Wait for the specified time to dissipate any residual hydraulic pressure.
   Duration: 30s

Check (Condition)

Hydraulic Hoses

⚠ **WARNING** Damaged hoses can cause fatal accidents. Examine the hoses regularly. Do not use the machine if a hose or hose fixture is damaged.

WARNING Fine jets of fluid at high pressure can penetrate the skin. Keep face and hands well clear of fluid under pressure and wear personal protective equipment. Hold a piece of cardboard close to suspected leaks and then examine the cardboard for signs of fluid. If fluid penetrates your skin, get medical help immediately.

Examine the hoses for:

- Damaged hose ends
- Worn outer covers
- Ballooned outer covers
- Kinked or crushed hoses
- Exposed armouring in the outer covers
- Displaced hose end fittings.
- Worn cover sheathing or hose burst protection covering

Replace a damaged hose before you use the machine again.

The replacement hoses must be of the same size, standard and pressure rating. If necessary, for more information contact your JCB dealer.

Check (Leaks)

⚠ **Notice:** If the fluid is cloudy, then water or air has contaminated the system. This could damage the hydraulic pump. Contact your JCB dealer immediately.

1. Make the machine safe.
2. Open the access covers.
3. Check the hydraulic hoses for damage.
4. Close the access covers.
5. If necessary, contact your JCB dealer.

Oil

Check (Level)

1. Make the machine safe.

Refer to: Maintenance Positions (Page 87).

2. Look at the hydraulic fluid in the sight tube. If the hydraulic fluid is cloudy, water or air is in the system. Water or air in the system can damage the hydraulic pump. Contact your JCB dealer if the hydraulic fluid is cloudy.
   Refer to: Service Points (Page 88).
3. The level of hydraulic fluid should be between the two marks on the sight tube.
4. If necessary, add the recommended hydraulic fluid:
   Refer to: Fluids, Lubricants and Capacities (Page 135).
   4.1. Release the pressure from the hydraulic tank.
   Refer to: Discharge (Page 121).
   4.2. Get safe access to the hydraulic filler port.
   Refer to: Service Points (Page 88).
   4.3. Use a suitable container to add the hydraulic fluid through the filler port.
   4.4. Check the level of hydraulic fluid.

Replace

⚠ **Notice:** Ensure that dirt etc. does not enter the hydraulic system during this job.

Hydraulic fluid at system pressure can injure you. Relieve the system pressure before changing the Hydraulic filter element.

Drain the hydraulic tank when the oil is warm.

More dirt is removed from the hydraulic system with warm oil than with cold.

Figure 73.

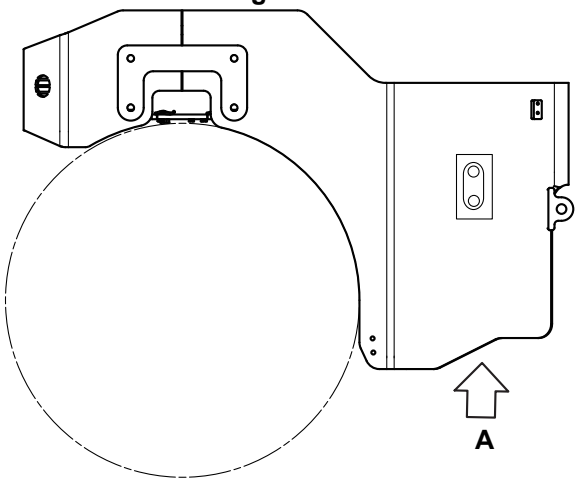

A Drain plug location

1. Make the machine safe.
   Refer to: Maintenance Positions (Page 87).
2. Clean the filler cap (breather), drain plug and the surface of the hydraulic oil reservoir.
3. Remove the filler cap.
4. Put a container of suitable size below the drain plug on the left hand side of the front chassis. Do not confuse with the fuel tank drain plug. Refer to Figure 73.
5. Remove the drain plug and drain the oil.

6. Install drain plug.

Figure 74.

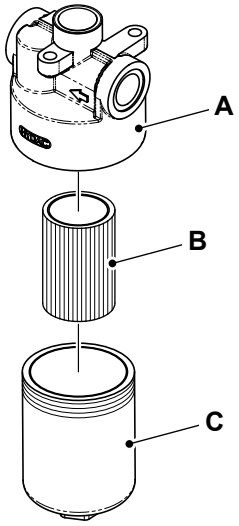

A Filter head
B Filter element
C Filter bowl

1. Clean the area around the filter assembly. Refer to Figure 74.
2. Remove the filter bowl and dispose of the filter element.
3. Clean the filter bowl.
4. Check the O-ring located on the filter head. If necessary, replace the O-ring.
5. Install the filter and tighten the filter bowl.
6. Check the filler screen for damage and impurities. If necessary clean or replace the filler screen.
7. Fill the tank with recommended oil through the filler.
   Refer to: Fluids, Lubricants and Capacities (Page 135).
   7.1. Add oil until the oil level is above the filler screen.
8. Check the O-ring on the filer cap for damage. Replace if necessary.
9. Replace the filler cap.
10. Run the engine for a few minutes, then check the oil level.
    Refer to: Check (Level) (Page 121).
    10.1. Add oil if necessary.
11. Check the oil filter and drain plug for leaks.

Cylinders / Rams

Check (Condition)

Extend each ram fully, one at a time and visually examine for score marks, dents, leaks or similar defects. Make the machine safe before inspecting each ram.

If a ram piston appears defective, contact your service engineer or JCB dealer.

Electrical System

General

Check (Operation)

Make sure all of the electrical equipment operates correctly, for example:

- Switches
- Warning lights
- Beacon
- Alarms
- Horn
- Hourmeter/display
- Battery
- Lights

All defective equipment must be repaired before the machine is used.

Check (Condition)

Examine the electrical circuits regularly for:

- Damaged connectors
- Loose connections
- Chafing on the wiring harnesses
- Corrosion
- Missing insulation
- Incorrect routing of the wiring harnesses.

Do not use the machine if one or more of these faults are found. You must make sure that the electrical circuit is repaired immediately.

Battery

Clean

⚠ **WARNING** Keep metal watch straps and any metal fasteners on your clothes, clear of the positive (+) battery terminal. Such items can short between the terminal and nearby metal work. If it happens you can get burned.

1. Make the machine safe.
   Refer to: Maintenance Positions (Page 87).
2. Get access to the battery.
   Refer to: Access Apertures (Page 90).
3. If the terminal posts are corroded and covered with white powder wash them with hot water. If there is considerable corrosion, clean the terminal posts with a wire brush or abrasive paper. Refer to Figure 75.

Figure 75.

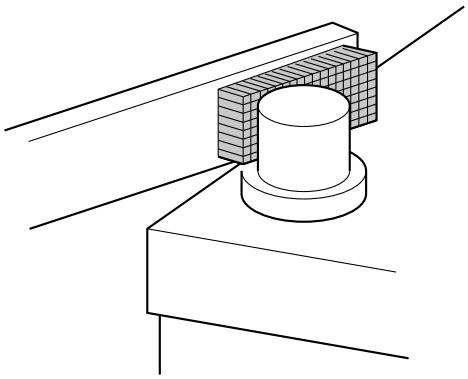

4. Apply a thin layer of petroleum jelly to the terminal posts.

Connect

⚠ **WARNING** Keep metal watch straps and any metal fasteners on your clothes, clear of the positive (+) battery terminal. Such items can short between the terminal and nearby metal work. If it happens you can get burned.

CAUTION The machine is negatively earthed. Always connect the negative pole of the battery to earth.

When connecting the battery, connect the earth (-) lead last.

When disconnecting the battery, disconnect the earth (-) lead first.

CAUTION Understand the electrical circuit before connecting or disconnecting an electrical component. A wrong connection can cause injury and/or damage.

1. Get access to the batteries.
   Refer to: Disconnect (Page 125).
2. Connect the battery leads. Connect the earth (-) terminal last.
3. If the machine has a battery isolator, move the switch to the on position.

Disconnect

⚠ **WARNING** Keep metal watch straps and any metal fasteners on your clothes, clear of the positive (+) battery terminal. Such items can short between the terminal and nearby metal work. If it happens you can get burned.

CAUTION The machine is negatively earthed. Always connect the negative pole of the battery to earth.

When connecting the battery, connect the earth (-) lead last.

When disconnecting the battery, disconnect the earth (-) lead first.

CAUTION Understand the electrical circuit before connecting or disconnecting an electrical component. A wrong connection can cause injury and/or damage.

Notice: Do not disconnect the battery while the engine is running, otherwise the electrical circuits may be damaged.

1. Make the machine safe.
   Refer to: Maintenance Positions (Page 87).
2. Get access to the batteries.
   Refer to: Access Apertures (Page 90).
3. If the machine has a battery isolator, switch off the battery isolator and remove the key.
   Refer to: Battery Isolator (Page 30).

4. Disconnect the battery leads. Disconnect the earth (-) terminal first.

Battery Isolator

Check (Operation)

⚠ **Notice:** Do not isolate the machine electrics when the engine is running, this may cause damage to the machine electrics.

1. Isolate the machine electrics.
2. Make sure that the machine electrics are isolated.

A defective isolator must be repaired before the machine is used. For more information, contact your JCB dealer.

Fuses

Replace

Secondary Fuses- Steering Column

⚠ **Notice:** Always replace fuses with ones of correct ampere rating to avoid electrical system damage.

The electrical circuits are protected by fuses. If a fuse blows, find out why before a new one is installed. Refer to: Fuses (Page 142).

The secondary fuses are situated in the back side of steering column panel. Refer to Figure 76.

To get accesses to the secondary fuses:

1. Make the machine safe.
   Refer to: Maintenance Positions (Page 87).
2. Remove the screws.
3. Remove the panel. Refer to Figure 76.

Figure 76.

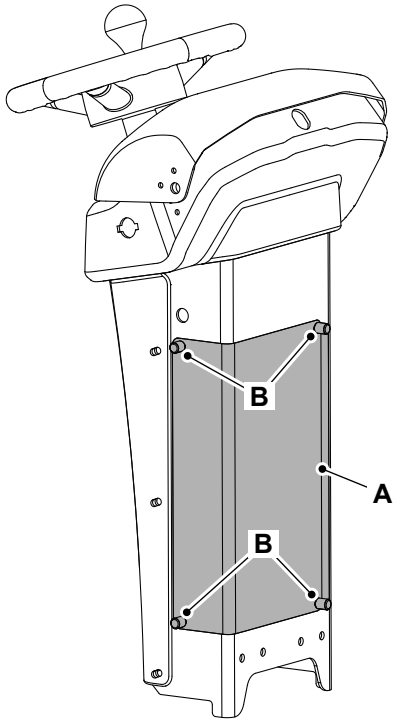

A Panel **B** Screws

Primary Fuses- Engine Compartment cover

Open the engine compartment cover to get access to the primary fuses. Refer to: Engine Compartment Cover (Page 90).

Relays

Replace

The relays are situated in the back side of steering column panel. Refer to Figure 77.

To get accesses to the relays:

1. Make the machine safe.
2. Remove the screws.
3. Remove the panel.

Figure 77.

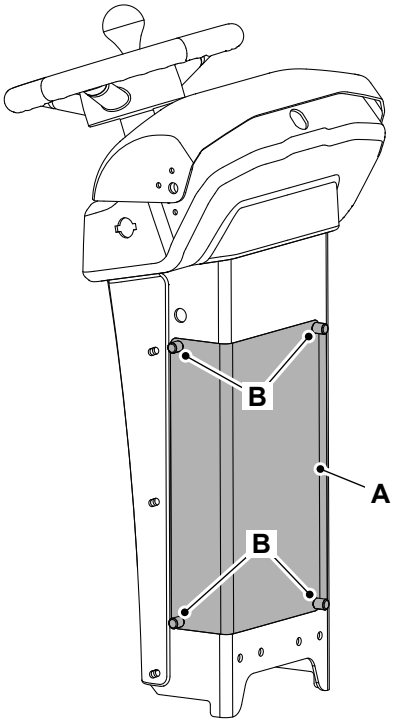

A Panel

B Screws

Technical Data
Static Dimensions

Dimensions

For: CT160 ..... Page 129
For: CT260 ..... Page 130

(For: CT160)

Figure 78.

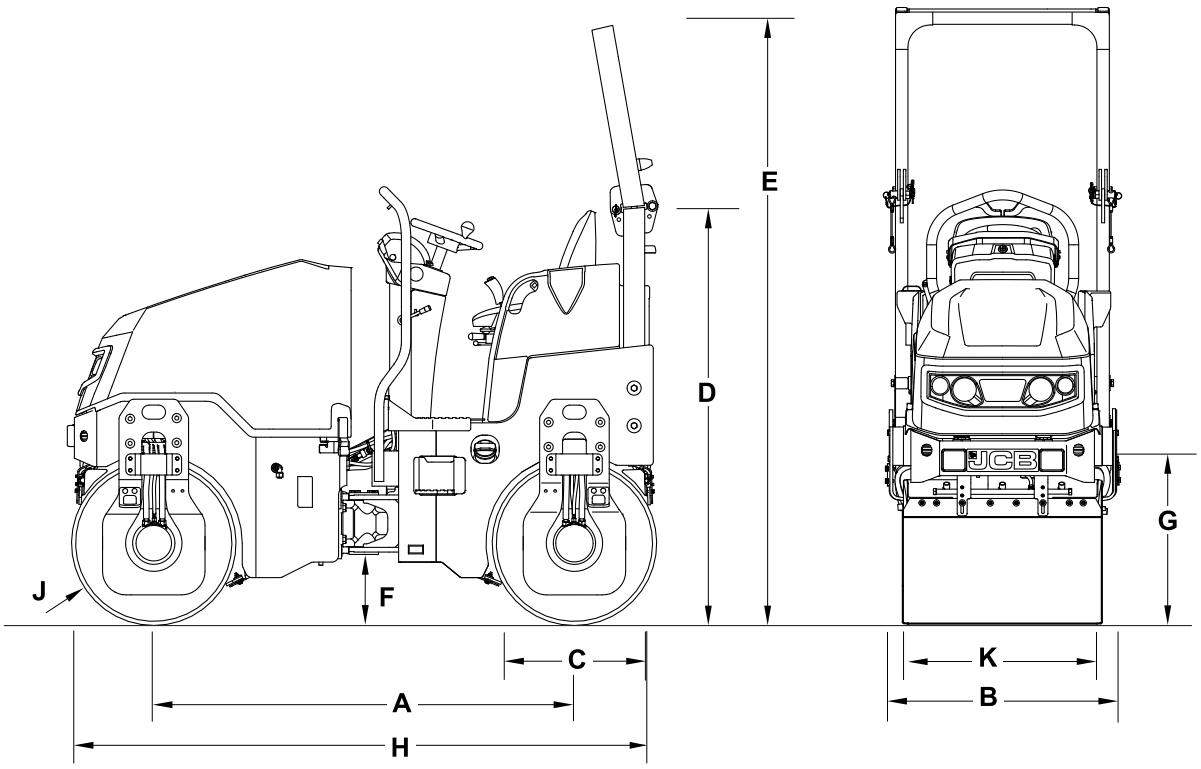

Table 16.

Item	Description	CT160-80	CT160-100
A	Wheelbase	1,560mm	1,560mm
B	Overall width	960mm	1,090mm
C	Drum diameter	580mm	580mm
D	Height to the top of seat	1,650mm	1,650mm
E	Height with ROPS (Roll-Over Protective Structure)	2,485mm	2,485mm
F	Ground clearance	255mm	255mm
G	Kerb clearance	510mm	510mm
H	Total travel length	2,140mm	2,140mm
J	Drum thickness	12mm	12mm
K	Drum width	800mm	1,000mm

(For: CT260)

Table 17.

Item	Description	CT260-100	CT260-120
A	Wheelbase	1,790mm	1,790mm
B	Overall width	1,095mm	1,295mm
C	Drum diameter	700mm	700mm
D	Height to the top of seat	1,755mm	1,755mm
E	Height with ROPS	2,510mm	2,510mm
F	Ground clearance	270mm	270mm
G	Kerb clearance	560mm	560mm
H	Total travel length	2,490mm	2,490mm
J	Drum thickness	12mm	12mm
K	Drum width	1,000mm	1,200mm

Weights

For: CT160 ..... Page 130
For: CT260 ..... Page 130

(For: CT160)

Table 18.

Description	CT160-80	CT160-100
Nominal weight	1,630kg	1,710kg
Operating weight CECE (Committee for European Construction Equipment)	1,710kg	1,790kg
Maximum operating weight	1,790kg	1,870kg
Operating weight front	800kg	840kg
Operating weight rear	910kg	950kg

(For: CT260)

Table 19.

Description	CT260-100	CT260-120
Nominal weight	2,280kg	2,420kg
Operating weight CECE	2,420kg	2,560kg
Maximum operating weight	2,600kg	2,740kg
Operating weight front	1,190kg	1,260kg
Operating weight rear	1,230kg	1,300kg

Performance Dimensions

General

For: CT160 ..... Page 131
For: CT260 ..... Page 131

(For: CT160)

Table 20.

Description	CT160-80	CT160-100
Steering angle	33°	33°
Oscillation angle	8°	8°
Inner turning radius	2,160mm	2,090mm
Drum offset (standard)	56mm	56mm
Travel speed	9km/h (5.6mph)	9km/h (5.6mph)
Gradeability with or without vibration	25–35%	25–35%

Table 21.

Description	CT160-80		CT160-100	
Vibration stage	1	2	1	2
Vibration frequency	50Hz	66Hz	50Hz	66Hz
Amplitude	0.4mm		0.35mm	
Centrifugal force	10.9kN	19.1kN	10.9kN	19.1kN

(For: CT260)

Table 22.

Description	CT260-100	CT260-120
Steering angle	33°	33°
Oscillation angle	8°	8°
Inner turning radius	2,475mm	2,375mm
Drum offset (standard)	60mm	60mm
Travel speed	10km/h (6.2mph)	10km/h (6.2mph)
Gradeability with or without vibration	30–40%	30–40%

Table 23.

Description	CT260-100		CT260-120	
Vibration stage	1	2	1	2
Vibration frequency	50Hz	66Hz	50Hz	66Hz
Amplitude	0.56mm		0.51mm	
Centrifugal force	23.6kN	41.1kN	23.6kN	41.1kN

Noise Emissions

General

To assist in compliance with European Directives 2000/14/EC and 2005/88/EC, the noise data values for this type of machine have been provided on the following page(s) and may be used for the assessment of risks to exposure from noise.

The noise data values shown only apply to CE marked machines.

For information relating to this machine when used with other JCB approved attachments, please refer to the literature accompanying the attachments.

Table 24. Definition of terms

Term	Definition	Notes
LpA	A-weighted sound pressure level measured at the operator's station.	Determined in accordance with the test method defined in ISO 6396 and the dynamic test conditions defined on 2000/14/EC.
LwA	Equivalent A-weighted sound power level emitted by the machine.	Guaranteed equivalent sound power (external noise) determined in accordance with the dynamic test conditions defined in 2000/14/EC.

Noise Data

For: CT160 ..... Page 132
For: CT260 ..... Page 132

(For: CT160)

Table 25. All Machines

Model	Engine rating (kW)(1)	LpA	LwA
CT160	14.2	87 db(A)	103 db(A)

(1) Net installed power.

(For: CT260)

Table 26. All Machines

Model	Engine rating (kW)(1)	LpA	LwA
CT260	18.2	87 db(A)	104 db(A)

(1) Net installed power.

Vibration Emissions

General

To assist in compliance with the European Directive 2002/44/EC, the duty specific vibration emission values for this machine type have been provided on the following page(s) and may be used for the assessment of risks to exposure from vibration.

Unless otherwise indicated for a specific operating condition, the vibration values are calculated with the machine equipped with the standard attachments (for example bucket, shovel, fork, etc.) for the respective operating condition.

The vibration values are calculated from measurements in three perpendicular axes (X, Y and Z). The highest weighted (RMS (Root Mean Square)) value is used to specify the vibration emission.

The axis upon which the highest weighted (RMS) value occurs is shown on the vibration chart for each of the machine operating duties, see dominant axis (X, Y or Z).

Figure 79.

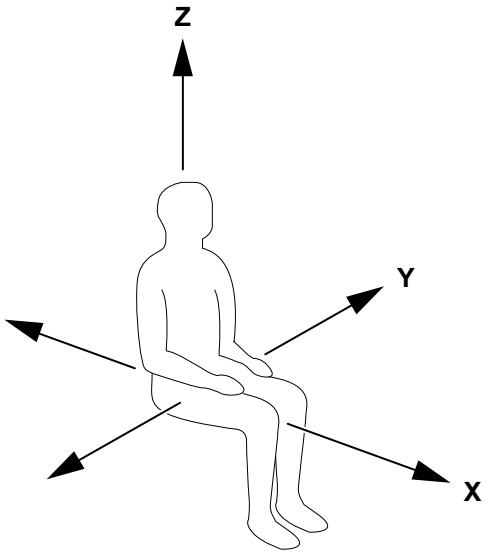

Exposure to Vibration

Exposure to vibration can be minimised through:

- Selection of the correct size and capacity of machine, equipment and attachments for a particular application
- Use of a machine equipped with an appropriate seat, keeping the seat maintained and adjusted
- Checks to make sure that the machine is correctly maintained, reporting and correcting any faults
- Steering, braking, accelerating, shifting gears, moving the attachments and load smoothly
- Adjusting the machine speed and travel path to minimise the vibration level
- Keeping the terrain on worksites where the machine works and travels in good condition, removing any large rocks or obstacles and filling in any ditches and holes
- Choosing routes that avoid rough surfaces and, if this is not possible, drive more slowly to avoid bumping and jolting
- Travel over longer distances at an adjusted (medium) speed
- Avoiding bad postures, i.e. slumping in your seat, constantly leaning forward or sideways or driving with your back twisted.

Vibration Data

The whole-body vibration emission determined in accordance with ISO 2631-1:1997 for this machine type is 0.69m/s² normalised to an 8h reference period [A(8)] and based upon a test cycle defined in SAE J116.

Hand-arm vibration determined in accordance with dynamic test conditions defined in ISO 5349-2: 2001 does not exceed 2.5m/s².

Fluids, Lubricants and Capacities

General

For: CT160 ..... Page 135
For: CT260 ..... Page 135

(For: CT160)

Table 27.

Item	Capacity	Fluid/Lubricant	JCB Part Number	Container Size	International Specification
Fuel Tank	33L	Diesel	-	-	Refer to 'Fuel'
Engine (Oil)	5.1L	JCB Engine Oil EP 15W40	4001/1805	20L	API CH-4
		JCB Engine Oil UP 10W30 (for cold climate)	4001/3005		API CJ-4
Engine (Coolant)	3.1L	JCB Antifreeze HP/Coolant-Concentrate	4006/1120	20L	ASTM D6210
Hydraulic tank	41L	JCB HP Hydraulic Fluid 46	4002/0805	20L	-
Vibration system	-	JCB Special HP Grease	4003/2017	0.4kg	-
Sprinkler system	100L	Water	-	-	-

(For: CT260)

Table 28.

Item	Capacity	Fluid/Lubricant	JCB Part Number	Container Size	International Specification
Fuel Tank	46L	Diesel	-	-	Refer to 'Fuel'
Engine (Oil)	7L	JCB Engine Oil EP 15W40	4001/1805	20L	API CH-4
		JCB Engine Oil UP 10W30 (for cold climate)	4001/3005		API CJ-4
Engine (Coolant)	5.5L	JCB Antifreeze HP/Coolant-Concentrate	4006/1120	20L	ASTM D6210
Hydraulic tank	60L	JCB HP Hydraulic Fluid 46	4002/0805	20L	-
Vibration system	-	JCB Special HP Grease	4003/2017	0.4kg	-
Sprinkler system	197L	Water	-	-	-

Fuel

Fuel Standards, Grades and Recommendations

Diesel fuels specified to EN590 or ASTM D975 are recommended.

- Since Kubota diesel engines of less than 56 kW (75 hp) utilize EPA Tier 4 and Interim tier 4 standards, the use of low sulfur fuel or ultra low sulfur fuel is mandatory for these engines, when operated in US EPA regulated areas. Therefore, use No.2-D S500 or S15 diesel fuel as an alternative to No.2-D, and use No.1-D S500 or S15 diesel fuel as an alternative to No.1-D for below the specified ambient temperatures. -10°C (14.0°F)

- No.2-D is a distillate fuel of lower voltility for engines in industrial and heavy mobile service. (SAE J313 JUN87)

Requirements for Diesel Fuel

1. Good ignitability

   1.1. Fuel with good ignitability burns quickly as it is atomized into the combustion chamber, allowing easy starting and smooth running with a minimum of smoke and noise. Therefore, fuel with good ignitability must be used. Ignitability is indicated by the cetane number.

   1.2. The minimum recommended fuel Cetane rating is 45. A cetane rating greater than 50 is preferred, especially for below the specified ambient temperatures or elevations above the specified height.

   Temperature: -20°C (-4.0°F)
   Length/Dimension/Distance: 1,500m

2. Appropriate viscosity

   2.1. Combustion is the engine begins with atomization of fuel, which requires a low viscosity. However, penetration of injection is required of the atomized fuel to distribute the atomized particles throughout the combustion chamber, this requires certain amount of viscosity.

   2.2. Fuel is also used to lubricate the plunger and nozzle sliding in the fuel injection subsystem, fuel must have a viscosity sufficient enough to prevent wear and seizure of parts.

   2.3. It must not be too viscous, because volatility of the atomized fuel will be reduced and distribution throughout the combustion chamber will be uneven.

3. Low sulfur content

   3.1. The sulfur content of fuel must be as low as possible since it contributes to wear of parts and deterioration of oil. When a sulfuric compound is burned, it changes to sulfurous acid gas (SO2) and sulfuric anhydride (SO3).

   3.2. A large amount of water is also generated in the form of condensation within the engine crankcase. All of these by-products turn into sulfuric acid, which is strongly corrosive. Corrosion in a diesel engine is the result.

   3.3. Diesel fuel specification type and sulfur content percentage (ppm) used, must be compliant with all applicable emission regulations for the area in which the engine is operated.

   3.4. Use of diesel fuel with sulfur content less than 0.10 % (1000 ppm) is strongly recommended.

   3.5. If high-sulfur (sulfur content 0.50 % (5000 ppm) to 1.0 % (10000 ppm)) is used as a diesel fuel, change the engine oil and filter at shorter intervals (approximately half).

   3.6. Do not use fuels that have sulfur content greater than 1.0 % (10000 ppm).

   3.7. No.1-D or No.2-D, S500 : Low Sulfur (LSD) less than 500 ppm or 0.05 wt.%

   3.8. No.1-D or No.2-D, S15 : Ultra Low Sulfur Diesel (ULSD) 15 ppm or 0.0015 wt.%

   3.9. Use of high sulfur fuel in an external EGR system prohibited.

4. Low pour point

   4.1. Fuel must have a low pour point to run smoothly from the fuel tank to the filter and through the fuel pipe of the fuel pump in cold weather.

   4.2. A low pour point and a good ignitability have contradicting effects since low pour point fuel generally has low cetane number.

5. Good volatility

   5.1. Fuel is atomized, vaporized and mixed with air before ignition at the combustion of diesel engine. Fuel must have a good volatility to become vaporized and burn quickly.

5.2. Any unvaporized oil will cause soot and smoke, and eventually contaminate the oil. Fuel with good volatility burns more completely, minimizing fuel combustion, lowering the exhaust gas temperature and does not generate black smoke.

6. Low residual carbon

6.1. Residual carbon is the carbonic residue that is generated during vaporization and decomposition of oil.

6.2. Although residual carbon and carbon accumulation in the engine have no direct relationship, they should be minimized.

7. Free of water and foreign matter

7.1. The fuel pump in a diesel engine is extremely precise, even the smallest trace of foreign matter can critically affect the fuel injection mechanism.

7.2. Dust or dirt in the air or a solid matter such as iron rust in the fuel must be eliminated. Water may become mixed with fuel during storage or transportation. Most of it is removed as it settles in storage.

7.3. Colloidal water floating or dissolved in water (0.1 to 0.5%) can enter the combustion chamber. Diesel fuel containing water loses its ignitability, adversely affecting combustion performance. Water must also be eliminated since it will freeze in cold temperature and block filtration.

Cetane Number

Cetane numbers indicate the anti-diesel knocking characteristics of fuel. The cetane number is measured in a similar way as an octane number using standard CFR testing engines.

A standard fuel is a mixture of n-cetane and alpha-methylnaphthalene. The former indicates the lowest knocking point, its cetane number is defined as 100. The latter has the greatest knocking points, its cetane number is defined as 0. Knocking of the standard fuel and the sample fuel is compared on testing engines by changing the mixing ratio of the two components in the standard fuel until both engines show equal knocking characteristics.

The percentage of n-cetane at this point in a standard fuel is then taken as the cetane number of the sample fuel. Anti-knocking characteristics of fuel oil can also be indicated by diesel indexes and cetane indexes, which are derived from results of characteristics tests without using testing engines.

The cetane number for KUBOTA diesel engines must not be less than 45.

Fuel Ratings

Fuel ratings vary in different countries. Fuel must be chosen according to the operating temperature and emission regulations. Fuel feed will be adversely affected if a fuel is used in a temperature below its pour point.

Japan (JIS K2204):

- Applicable range : This regulation specifies the diesel fuel to be used for diesel engines (mainly for automobiles).
- Type : Diesel fuel is classified into five types, i.e., Special No.1, No.1, No.2, No.3, and Special No.3, according to each pour point.
- Requirements - General matters : Diesel fuel is mainly composed of refined mineral oil having proper quality as the fuel oil for diesel engines (mainly those for automobiles), and it shall not include water and sediments.
- Required quality : The property of diesel fuel should be within the range specified in the table. Refer to Table 29.

Table 29.

Property Class of Fuel	Flash Point	Distillation (90% Distillation Temperature)	Pour Point	Mass % of Residual Carbon in 10% Residual Oil	Cetane[2]	Kinematic Viscosity 30 °C (86 °F) mm2/s (cSt)[3]	Sulfuric Mass %
Special No.1	Over 50°C (121.9°F)	Below 360°C (679.5°F)	Below 5°C (41.0°F)	Below 0.1	Over 50	Over 2.7	Below 0.05
No.1	Over 50°C (121.9°F)	Below 360°C (679.5°F)	Below -2.5°C (27.5°F)	Below 0.1	Over 50	Over 2.7	Below 0.05
No.2	Over 50°C (121.9°F)	Below 350°C (661.5°F)	Below -7.5°C (18.5°F)	Below 0.1	Over 45	Over 2.5	Below 0.05
No.3	Over 45°C (112.9°F)	Below 330°C (625.5°F)[1]	Below -20°C (-4.0°F)	Below 0.1	Over 45	Over 2.0	Below 0.05
Special No.3	Over 45°C (112.9°F)	Below 330°C (625.5°F)	Below -30°C (-22.0°F)	Below 0.1	Over 45	Over 1.7	Below 0.05

(1) It is below 350°C (661.5°F) in case of Kinematic viscosit 30°C (86.0°F) is below 4.7 mm2/c (4.4 cSt).
(2) It is possible to use cetane number.
(3) 1 mm2/s = 1 cSt

U.S.A. (SAE J313)

Automotive and railroad diesel fuels, in general, are derived from petroleum refinery products which are commonly referred to as middle distillates. Middle distillates represent products which have a higher boiling range than gasoline and are obtained from fractional distillation of the crude oil or from streams from other refining processes. Finished diesel fuels represent blends of middle distillates. The properties of commercial distillate diesel fuels depend on the refinery practices employed and depend on the refinery practices employed and the nature of the crude oils from which they are derived.

Thus, they may differ both with and within the region in which they are manufactured. Such fuels generally boil over a range between 163°C (325.2°F) and 371°C (699.3°F). Their makeup can represent various combinations of volatility, ignition quality, viscosity, sulfur level, gravity, and other characteristics.

Additives may be used to impart special properties to the finished diesel fuel.

Table 30.

Grade of Diesel Fuel Oil	Flash point	Distillation Temperatures °C (°F) 90% Point	Viscosity Kinematic cSt or mm2/s at 40°C (103.9°F)	Cetane Number
No.1-D	38°C (100.3°F)	Below 288°C (550.0°F)	1.3 to 2.4	Over 40
No.1-DLS	38°C (100.3°F)	Below 288°C (550.0°F)	1.3 to 2.4	Over 40
No.2-D	52°C (125.5°F)	282–338°C (539.2–639.9°F)	1.9 to 4.1	Over 40
No.2-DLS	52°C (125.5°F)	282–338°C (539.2–639.9°F)	1.9 to 4.1	Over 40

Biodiesel Fuel (B5)

Kubota only permits to use the biofuel (BDF) that satisfies the following conditions:

1. Only the fuel that contains 5% or lower volume mixing ratio of 100% BDF (B100) in the mineral diesel fuel can be used. (B5)
2. The mineral diesel fuel shall be according to the newest edition of EN590 (Europe) or ASTMD975 (USA), while the B100 to be mixed shall be according to the newest edition of EN14214 (Europe) or ASTMD6751 (USA) standards. The final mixture fuel B5 shall, also, be according to the newest edition of E590 (Europe). Raw expressed vegetable oil cannot be used.
3. B100 or the mixed fuel B5 shall be purchased from the reliable manufacturers or dealers (in USA, the one accredited by BQ-9000). Because on-the-site mixing tends to cause uneven mixing, it is recommendable to purchase the B5 that has been mixed at the manufacturer's factory in advance.
4. Uses of Kubota emission certified engines are responsible for obtaining any appropriate local, state and national exemptions required for the use of BDF.

In using the biofuel (BDF), pay enough attention to the storing methods, using methods, and maintenance methods of the engine described in the following clauses with the understanding of the characteristics of the biofuel.

1. To prevent accumulation of moisture in the fuel tank, keep the fuel tank full as much as possible. Tighten the cap of the fuel tank to prevent moisture intrusion.
2. Confirm the engine oil level before starting the engine every day. Keep strictly the engine oil change interval because the delay in the engine oil change causes damages to the engine.
3. In the cold weather, take special care because clogging of the fuel lines can cause such problems as starting failures.
4. Be careful that BDF tends to aggravate multiplication of and contamination by microorganisms, which can causes such malfunctions like corrosion of the fuel Bsystem or too early clogging of the fuel filter.
5. Pay careful attention to the following cautions, because the fuel (BDF) during refueling and in the fuel tank tends to deteriorate by oxygen, water, heat, and foreign matters.
   5.1. Do not store the fuel in the fuel tank or in drums for longer than 3 months.
   5.2. In the case of the prolonged parking or storage of the vehicle, wash the engine by idling it using the conventional mineral diesel oil for at least 30 minutes.
6. BDF is hygroscopic and, therefore, tends to contain higher moisture content than the conventional diesel fuel. Accordingly, the intervals of the fuel filter cleaning and exchange, the fuel pipe check and exchange, the nozzle check and exchange, and the fuel system maintenance and check shall be shorter than those for the conventional mineral diesel fuel. In addition, use of a sedimenter is strongly recommended.
7. When the biodiesel fuel is spilled on a painted surface, immediately wipe it off because it can damage the painting.
8. If the biodiesel fuel of higher concentration than B5 is used, it is possible to deteriorate the output and fuel consumption. Also, the higher concentration biodiesel fuel than B5 can corrode the brass/zinc parts and rubber/resin products of the fuel system. Therefore, never use the higher concentration biodiesel fuel than B5.
9. The adjustment of the tamper parts (fuel confinement) of the engine under the use of the biodiesel fuel is deemed to be an illegal activity to the emission regulation and punished. Never execute such adjustments.
10. The BDF of palm-oil-base has lower low-temperature fluidity than the BDF of soybean/rape seed-oil-base. Therefore, pay special attention to the fact that it can cause the fuel filter clogging during the cold season.

Coolant

⚠ **CAUTION** Antifreeze can be harmful. Obey the manufacturer's instructions when handling full strength or diluted antifreeze.

Check the strength of the coolant mixture at least once a year, preferably at the start of the cold period.

Replace the coolant mixture according to the intervals shown in the machine's Service Schedule.

You must dilute full strength antifreeze with clean water before use. Use clean water of no more than a moderate hardness (pH value 8.5). If this cannot be obtained, use de-ionized water. For further information advice on water hardness, contact your local water authority.

The correct concentration of antifreeze protects the engine against frost damage in winter and provides year round protection against corrosion.

The protection provided by JCB High Performance Antifreeze and Inhibitor is shown below.

Table 31.

Concentration	Level of protection
50% (Standard)	Protects against damage down to -40°C (-40°F)
60% (Extreme Conditions Only)	Protects against damage down to -56°C (-69°F)

Do not exceed a 60% concentration, as the freezing protection provided reduces beyond this point.

If you use any other brand of antifreeze:

- Make sure that the antifreeze complies with International Specification ASTM D6210.
- Always read and understand the manufacturer's instructions.
- Make sure that a corrosion inhibitor is included. Serious damage to the cooling system can occur if corrosion inhibitors are not used.
- Make sure that the antifreeze is ethylene glycol based and does not use Organic Acid Technology (OAT).

Torque Values

General

Drums Scrapers

Table 32.

Scrapers adjustment fasteners Refer to: Scraper (Page 113).	22N·m
Vulcollan scraper bolts	10N·m

Retrieval

Table 33.

Bypass screws (CT260)	42N·m
Bypass screws (CT160)	50 ± 5N·m

ROPS

Table 34.

ROPS (Roll-Over Protective Structure) Mounting bolts	259N·m, 275N·m (Loctite)
ROPS hinge bolts	100N·m

Electrical System

General

For: CT260 ..... Page 142
For: CT160 ..... Page 142

(For: CT260)

Table 35.

Item	Specification
Battery voltage/system voltage	12V
Battery	62Ah and 610 CCA
Battery dimension (length x width x height)	240mm x 175mm x 175mm

(For: CT160)

Table 36.

Item	Specification
Battery voltage/system voltage	12V
Battery	80Ah and 750 CCA
Battery dimension (length x width x height)	278mm x 175mm x 190mm

Fuses

Primary Fuses

Figure 80.

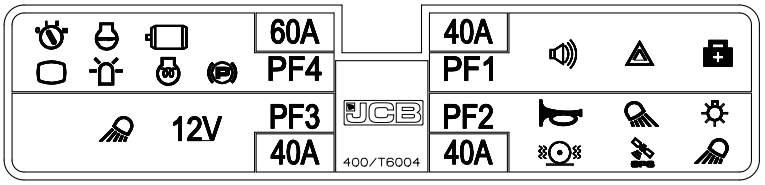

Table 37.

Fuse No.	Circuits Protected	Rating
PF1	Buzzer, Hazard, and Diagnostic	40A
PF2	Horn, Front and rear worklights, Road light, Vibration, and Livelink	40A
PF3	Front worklight and Power socket	40A
PF4	Alternator, Ignition relay, E-stop, Instrument panel, Beacon, Parkbrake, and Pre-heat	60A

Secondary Fuses

Figure 81.

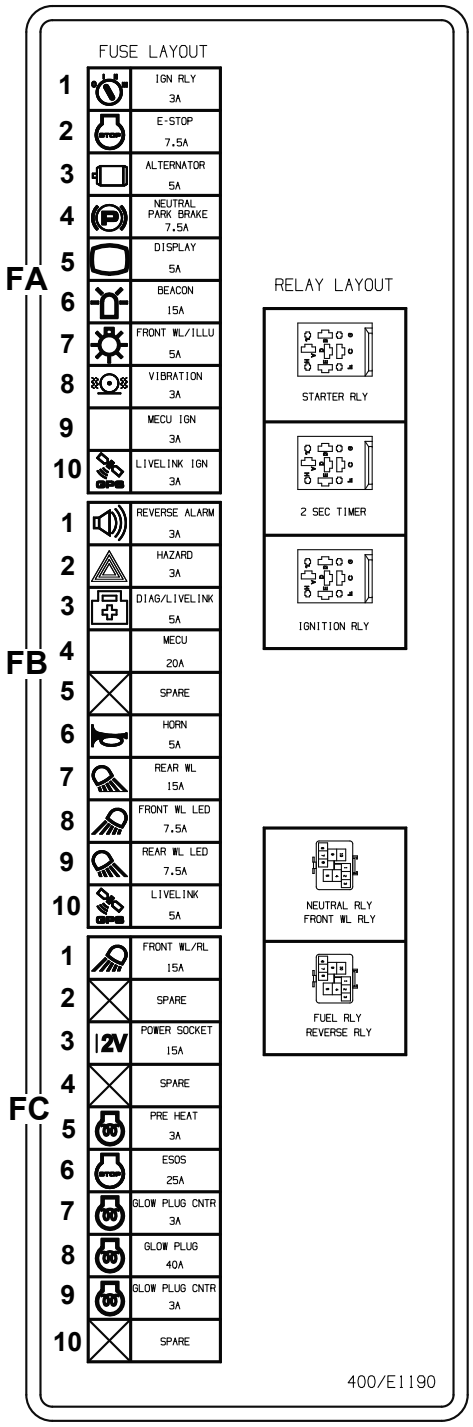

Table 38.

Fuse No.	Circuits Protected	Rating
FA1	Ignition relay	3A
FA2	Emergency stop	7.5A
FA3	Alternator	5A
FA4	Neutral parkbrake	7.5A
FA5	Instrument panel	5A

Fuse No.	Circuits Protected	Rating
FA6	Beacon	15A
FA7	Front worklight	5A
FA8	Vibration	3A
FA9	MECU (Machine Electronic Control Unit)Ignition	3A
FA10	Livelink ignition	3A
FB1	Reverse alarm	3A
FB2	Hazard	3A
FB3	Diagnostic/Livelink	5A
FB4	MECU	20A
FB5	Spare	-
FB6	Horn	5A
FB7	Rear worklight	15A
FB8	Front worklight LED (Light Emitting Diode)	7.5A
FB9	Rear worklight LED	7.5A
FB10	Livelink	5A
FC1	Front worklight	15A
FC2	Spare	-
FC3	Power socket	15A
FC4	Spare	-
FC5	Pre-heat	3A
FC6	ESOS (Engine Shut-Off Solenoid)	25A
FC7	Glow plug controller	3A
FC8	Glow plug	40A
FC9	Glow plug controller	3A
FC10	Spare	-

Relays

Figure 82.

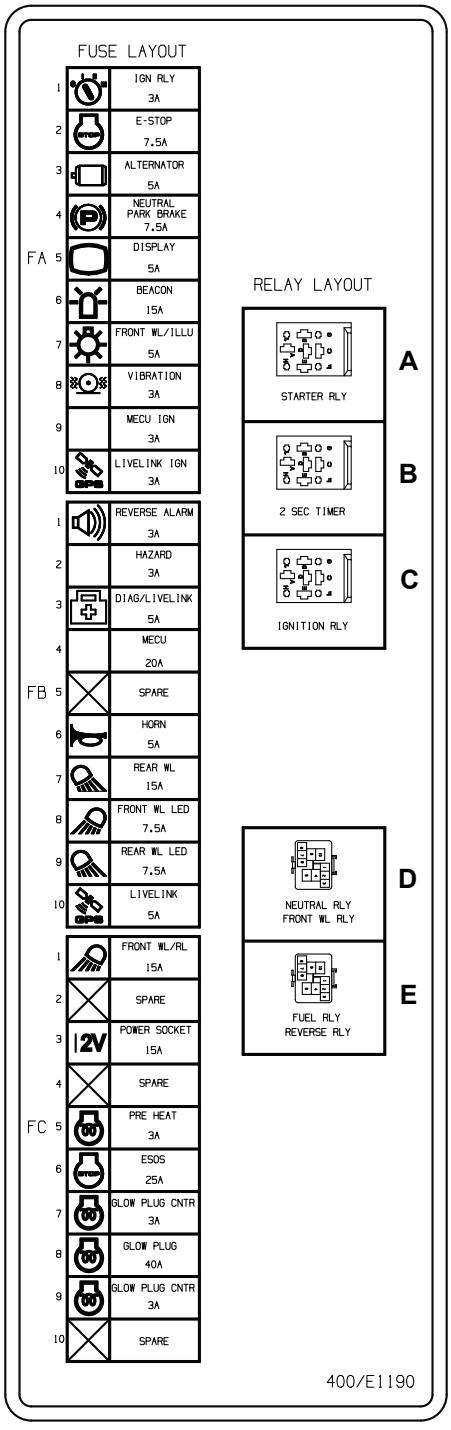

Table 39.

Relay No.	Description
A	Starter relay
B	2s timer relay
C	Ignition relay

Relay No.	Description
D	Neutral relay/Front worklight relay
E	Fuse relay/Reverse relay

Engine

General

For: CT160 ..... Page 147
For: CT260 ..... Page 147

(For: CT160)

Table 40.

Data	Description
Make	Kubota
Model	D1005-E4B-EU
Gross power rating at 2600 RPM (Revolutions Per Minute)	14.2kW
Engine management	Mechanical
Cooling system	Suction fan
Switchable anti-slip	Standard rocker switch
Drive to front and rear drum	Yes
Transmission	Hydrostatic
Travel motor	Poclain motor MK01, 408cc
Service brake	Hydrostatic propulsion system
Secondary brake	Hydraulically released multi-discbrake on front and rear drum

(For: CT260)

Table 41.

Data	Description
Make	Kubota
Model	D1703-M-DI-E4B
Gross power rating at 2200 RPM	18.2kW
Engine management	Mechanical
Cooling system	Suction fan
Switchable anti-slip	Standard rocker switch
Drive to front and rear drum	Yes
Transmission	Hydrostatic
Travel motor	Poclain motor MSE02, 398cc
Service brake	Hydrostatic propulsion system
Secondary brake	Hydraulically released multi-discbrake on front and rear drum

Declaration of Conformity

General

A completed copy of the EC Declaration of Conformity is supplied with all machines manufactured according to EC type examination and/or self-certification requirements.

A sample copy of the EC Declaration of Conformity and a summary of the information that can appear is provided. Refer to: Data (Page 149).

Data

Figure 83.

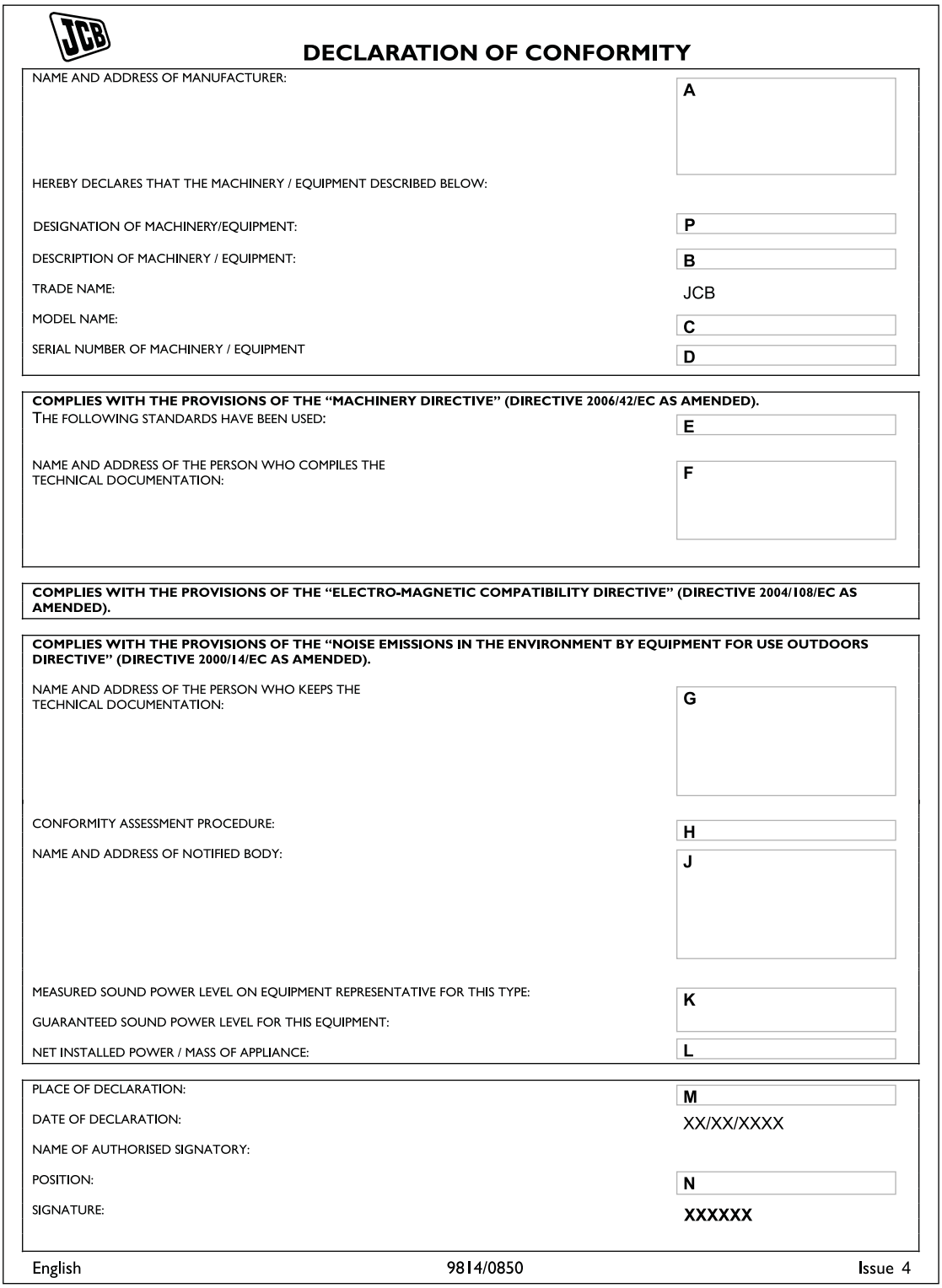

DECLARATION OF CONFORMITY

NAME AND ADDRESS OF MANUFACTURER: A

HEREBY DECLARES THAT THE MACHINERY / EQUIPMENT DESCRIBED BELOW:

DESIGNATION OF MACHINERY/EQUIPMENT: P

DESCRIPTION OF MACHINERY / EQUIPMENT: B

TRADE NAME: JCB

MODEL NAME: C

SERIAL NUMBER OF MACHINERY / EQUIPMENT D

COMPLIES WITH THE PROVISIONS OF THE "MACHINERY DIRECTIVE" (DIRECTIVE 2006/42/EC AS AMENDED).

THE FOLLOWING STANDARDS HAVE BEEN USED: E

NAME AND ADDRESS OF THE PERSON WHO COMPILES THE TECHNICAL DOCUMENTATION: F

COMPLIES WITH THE PROVISIONS OF THE "ELECTRO-MAGNETIC COMPATIBILITY DIRECTIVE" (DIRECTIVE 2004/108/EC AS AMENDED).

COMPLIES WITH THE PROVISIONS OF THE "NOISE EMISSIONS IN THE ENVIRONMENT BY EQUIPMENT FOR USE OUTDOORS DIRECTIVE" (DIRECTIVE 2000/14/EC AS AMENDED).

NAME AND ADDRESS OF THE PERSON WHO KEEPS THE TECHNICAL DOCUMENTATION: G

CONFORMITY ASSESSMENT PROCEDURE: H

NAME AND ADDRESS OF NOTIFIED BODY: J

MEASURED SOUND POWER LEVEL ON EQUIPMENT REPRESENTATIVE FOR THIS TYPE: K

GUARANTEED SOUND POWER LEVEL FOR THIS EQUIPMENT:

NET INSTALLED POWER / MASS OF APPLIANCE: L

PLACE OF DECLARATION: M

DATE OF DECLARATION: XX/XX/XXXX

NAME OF AUTHORISED SIGNATORY:

POSITION: N

SIGNATURE: XXXXXX

English 9814/0850 Issue 4

Table 42.

A	JCB Vibromax GmbH, Graf-Zeppelin-Str. 16, 51147 Cologne, Germany.
B	Compaction Machines.

C	Refer to: Product and Component Identification (Page 9).
D	Refer to: Machine (Page 9).
E	ISO (International Organization for Standardization) 20474 part 1 and part 2- 2013
F	Engineering Manager, JCB Vibromax GmbH, Graf-Zeppelin-Str. 16, 51147 Cologne, Germany.
G	Group NVH Specialist at JCB World Headquarters Rocester.
H	Annex VI Procedure 1.
J	A. V. Technology Avtech House Birdhill Lane Cheadle Heath Stockport Cheshire United Kingdom SK3 0XU.
K	Refer to: Noise Data (Page 132).
L	Refer to: Noise Data (Page 132).
M	Cologne
N	Managing Director.
P	Compactor.

Warranty Information

Service Record Sheet

Table 43.

	Signature and stamp		Date
	Annual Insurance (Yes)		Hours

Figure 84. Installation Checklist

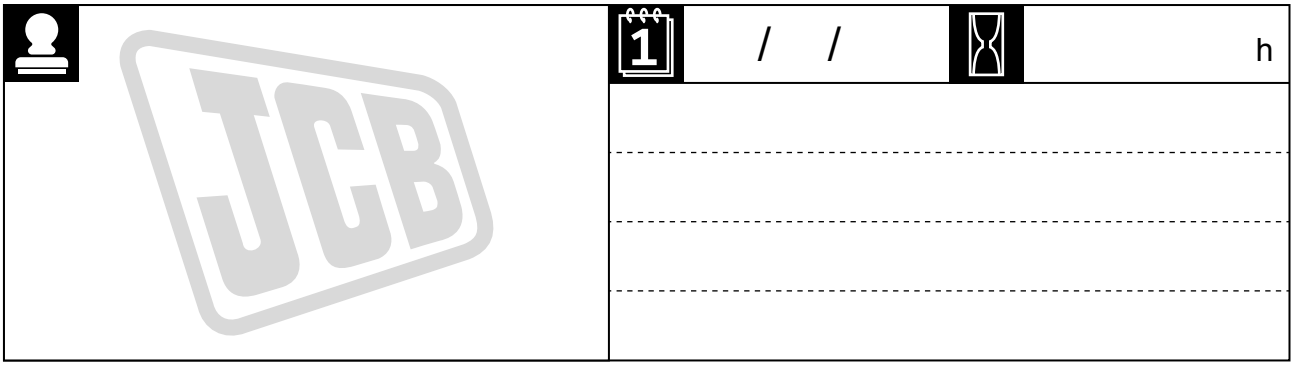

Figure 85. 500h/6 Month

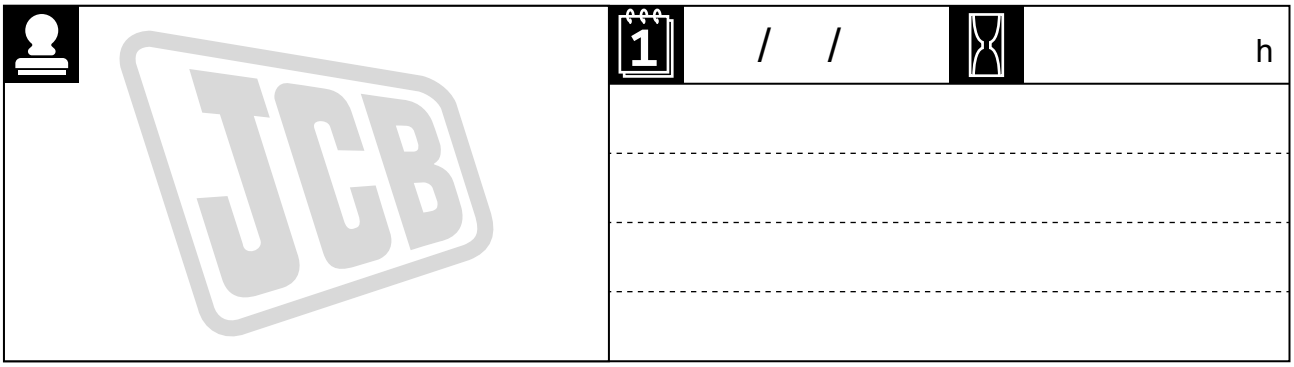

Figure 86. 1000h/12 Month

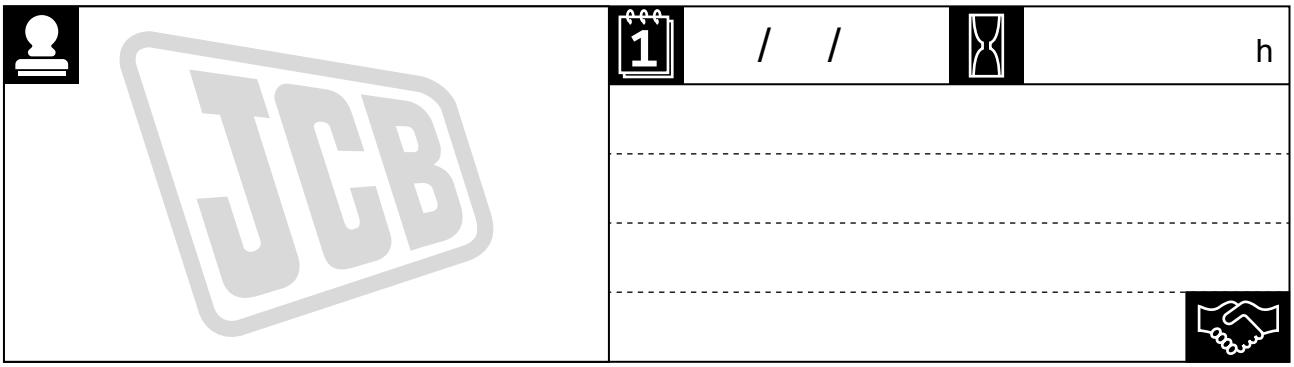

Figure 87. 1500h/18 Month

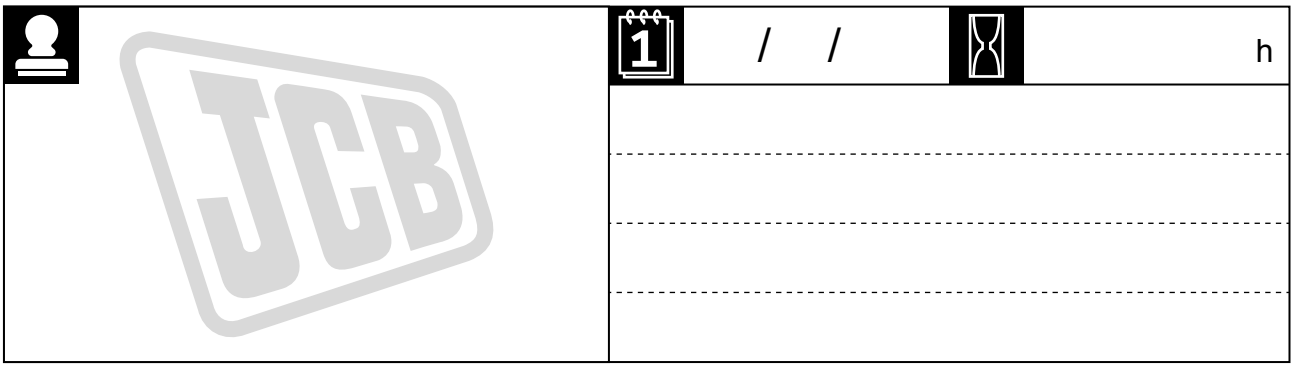

Figure 88. 2000h/24 Month

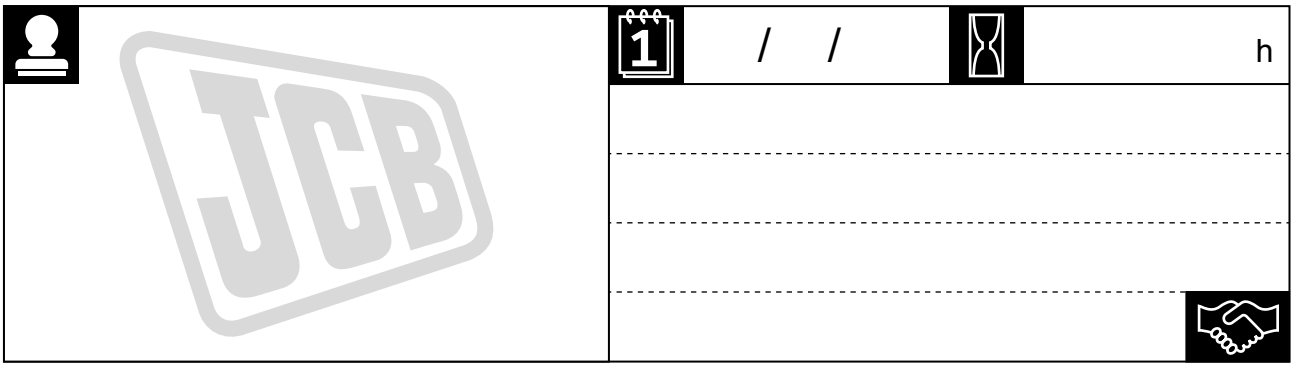

Figure 89. 2500h/30 Month

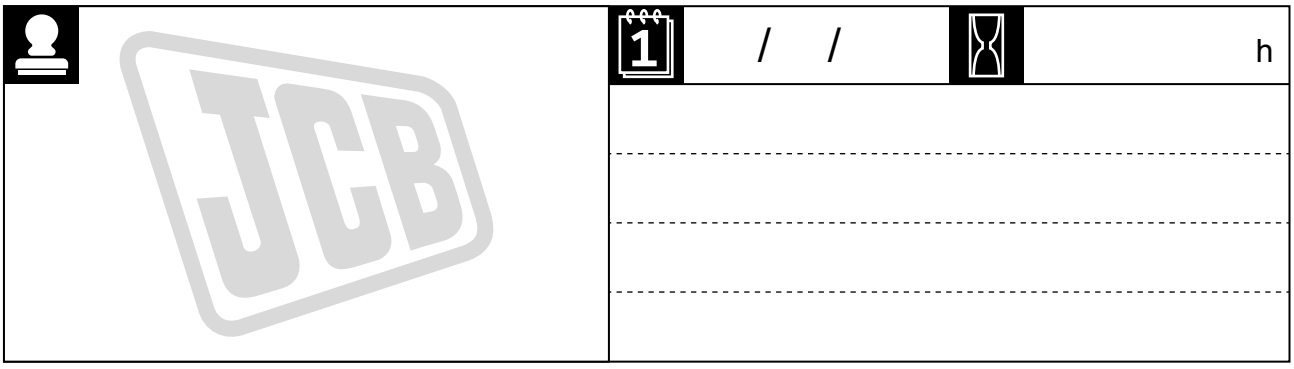

Figure 90. 3000h/36 Month

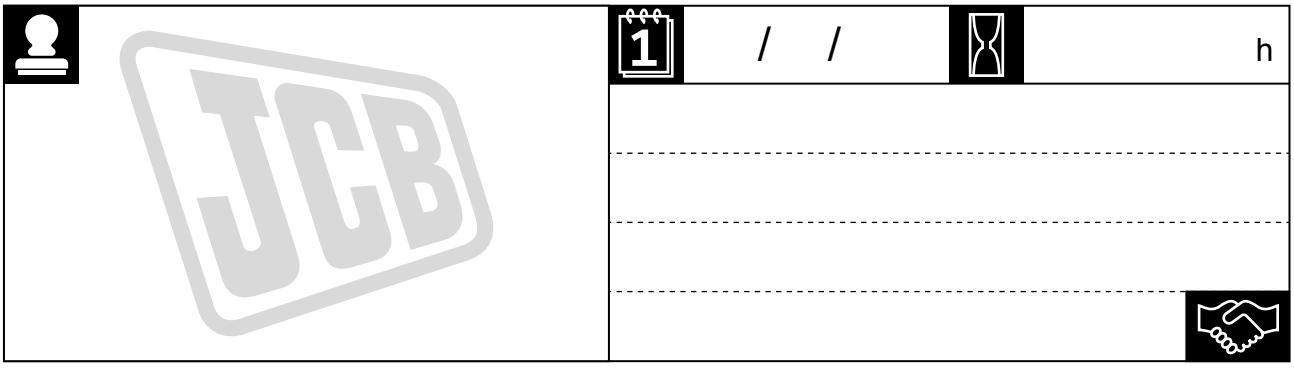

Figure 91. 3500h/42 Month

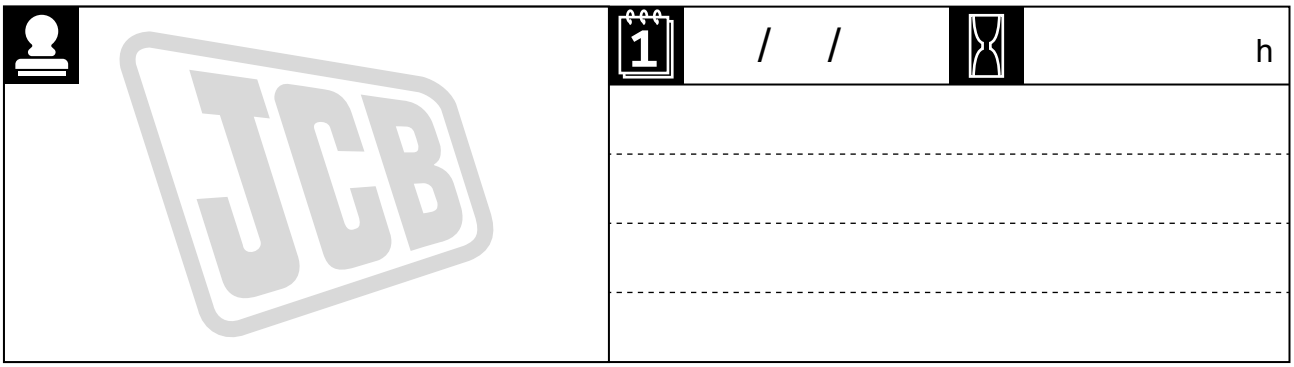

Figure 92. 4000h/48 Month

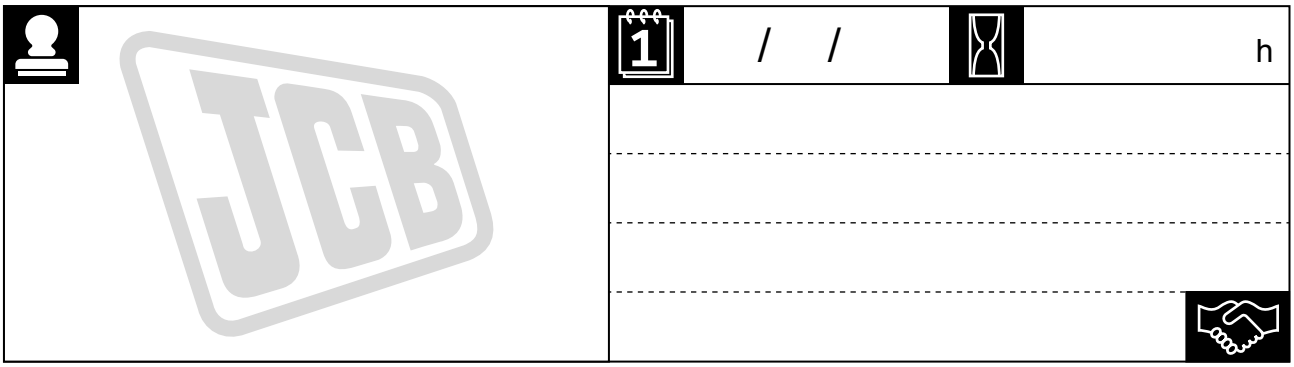

Figure 93. 4500h/54 Month

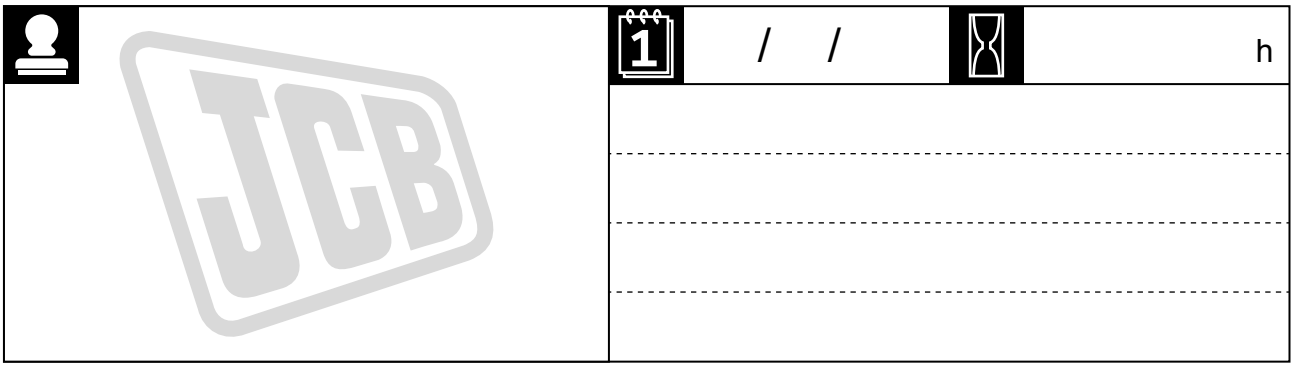

Figure 94. 5000h/60Month

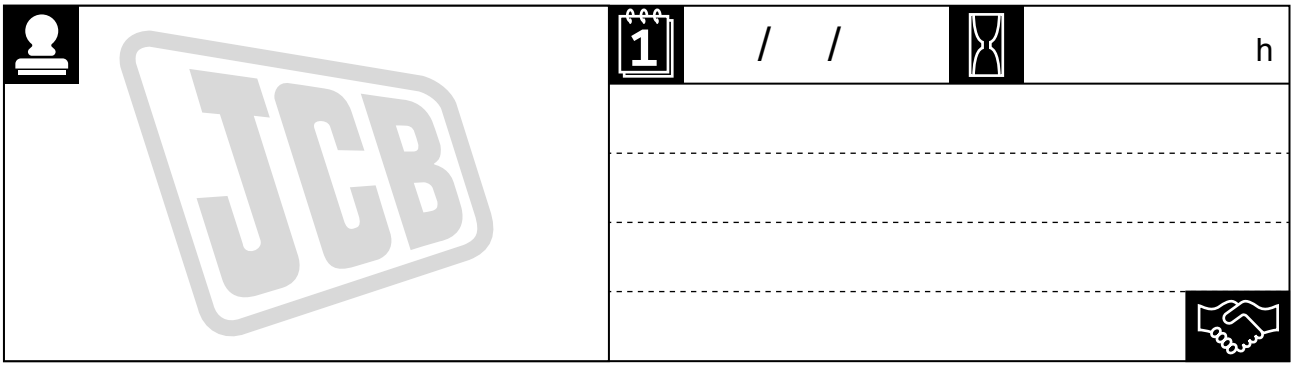

Figure 95. 5500h/66 Month

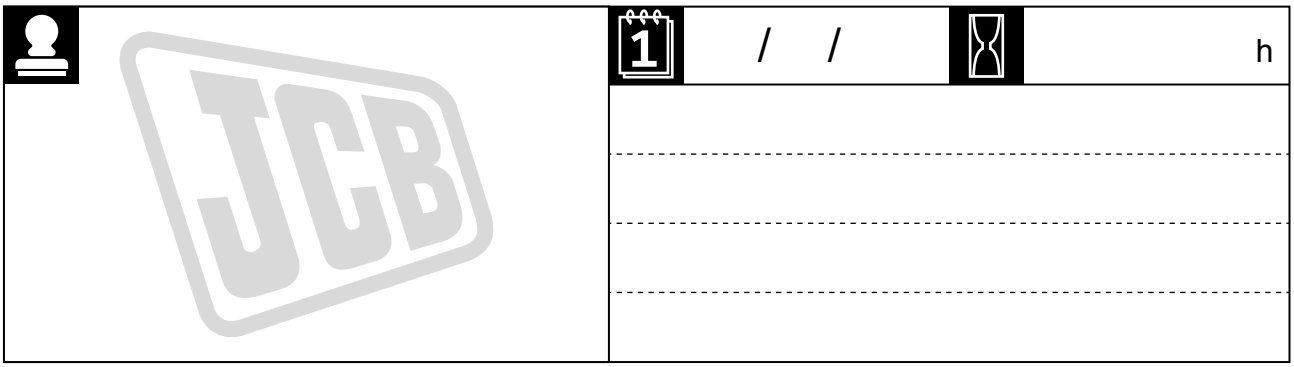

Figure 96. 6000h/72 Month

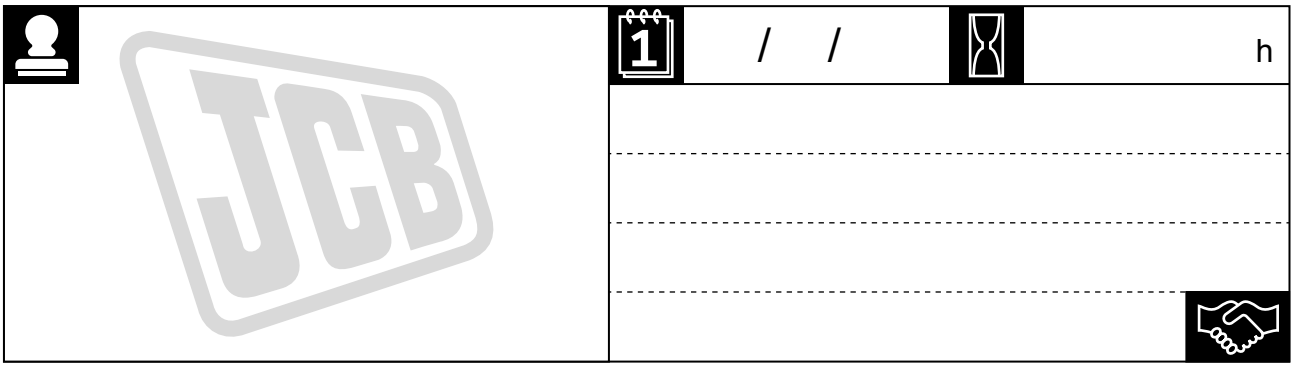

Figure 97. 6500h/78 Month

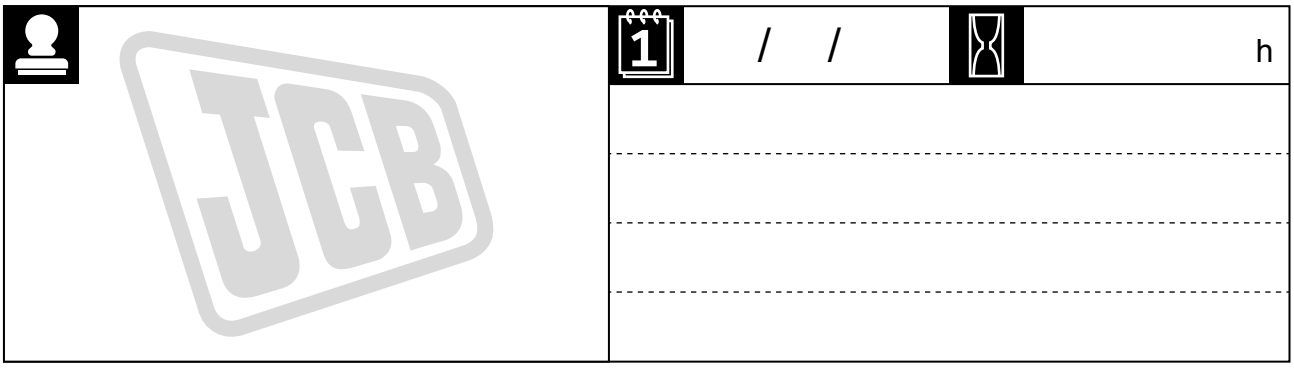

Figure 98. 7000h/84 Month

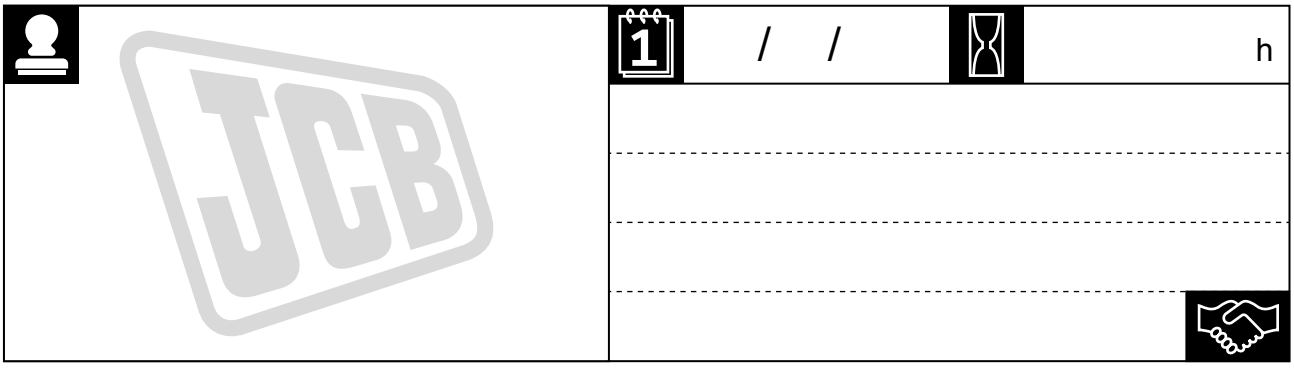

Figure 99. 7500h/90 Month

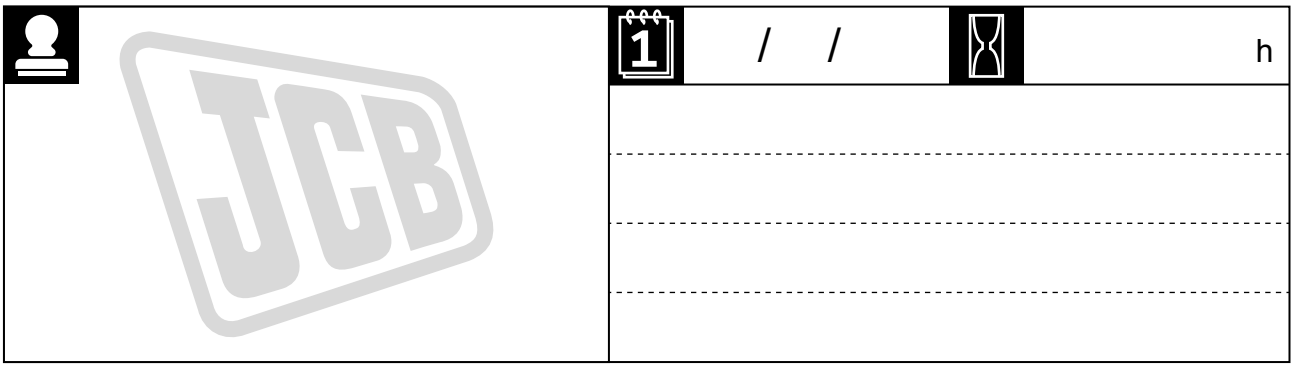

Figure 100. 8000h/96 Month

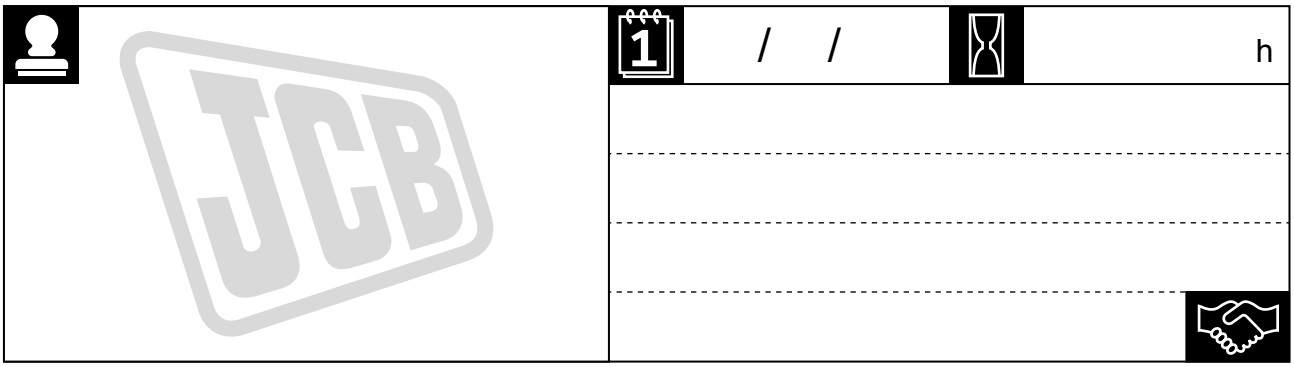

Figure 101. 8500h/102 Month

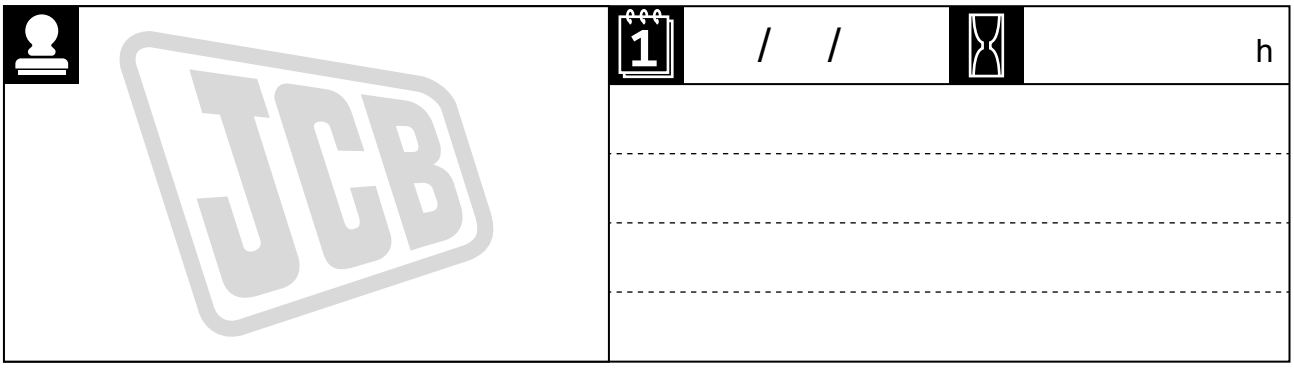

Figure 102. 9000h/108 Month

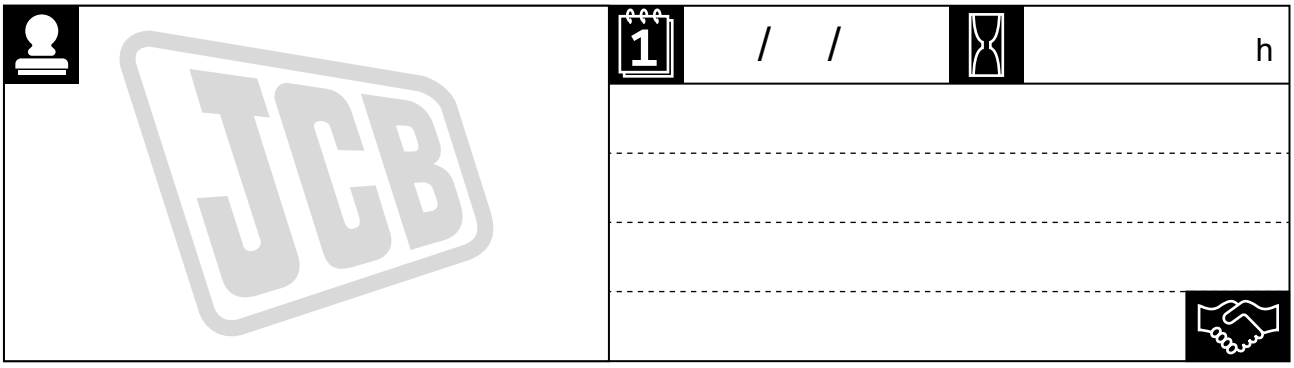

Figure 103. 9500h/114 Month

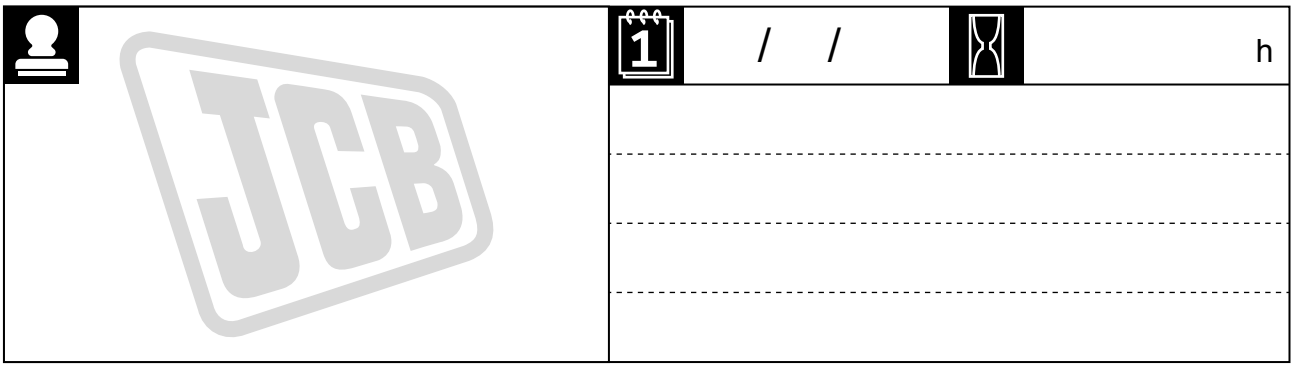

Figure 104. 10000h/120 Month

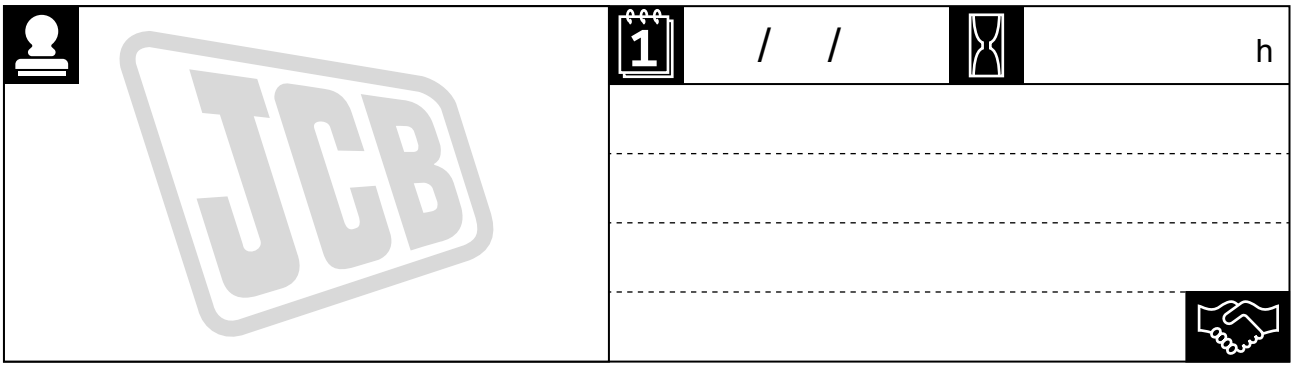

Figure 105. 10500h/126 Month

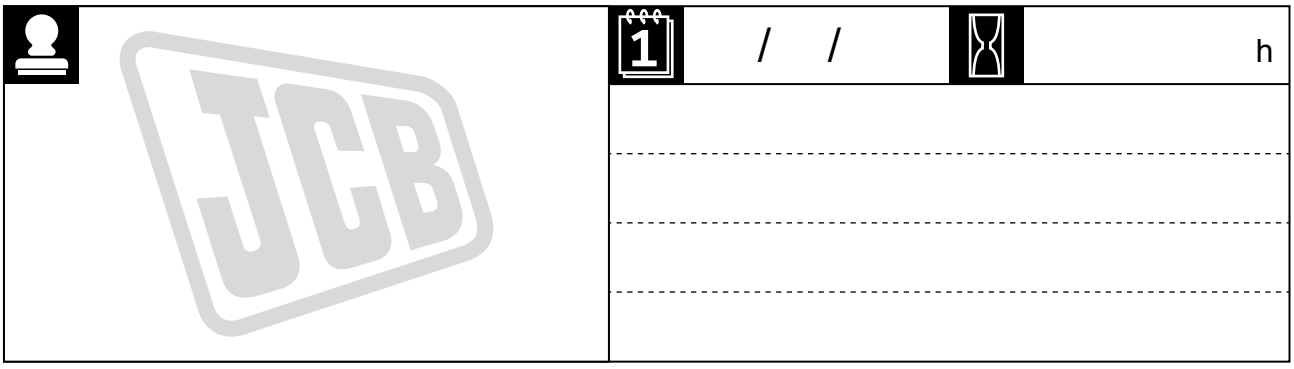

Figure 106. 11000h/132 Month

