# OPERATOR'S MANUAL

TANDEM ROLLER
**CT380, CT430**

EN - 9851/0800 ISSUE 2 - 11/2024

THIS MANUAL SHOULD ALWAYS STAY WITH THE MACHINE

# OPERATOR'S MANUAL

TANDEM ROLLER
**CT380, CT430**

EN - 9851/0800 - ISSUE 2 - 11/2024

This manual contains original instructions, verified by the manufacturer (or their authorized representative).

Copyright 2023 © JCB SERVICE
All rights reserved. No part of this publication may be reproduced, stored in a retrieval system, or transmitted in any form or by any other means, electronic, mechanical, photocopying or otherwise, without prior permission from JCB SERVICE.

www.jcb.com

# Foreword

## The Operator's Manual

⚠

You and others can be killed or seriously injured if you operate or maintain the machine without first studying the Operator's Manual. You must understand and follow the instructions in the Operator's Manual. If you do not understand anything, ask your employer or JCB dealer to explain it.

Do not operate the machine without an Operator's Manual, or if there is anything on the machine you do not understand.

Treat the Operator's Manual as part of the machine. Keep it clean and in good condition. Replace the Operator's Manual immediately if it is lost, damaged or becomes unreadable.

## California Proposition 65

⚠ **WARNING** Diesel engine exhaust and some of its constituents are known to the State of California to cause cancer, birth defects, and other reproductive harm.

## Machine Delivery and Installation

Even if you have operated this type of equipment before, it is very important that your new machines operations and functions are explained to you by a JCB Dealer Representative following delivery of your new machine.

Following the installation you will know how to gain maximum productivity and performance from your new product.

Please contact your local JCB dealer if the Installation Form (included in this manual) has not yet been completed with you.

Your local JCB Dealer is

Notes:

**Contents** **Page No.**

Acronyms Glossary ..... vi

**Introduction**
About this Manual
Model and Serial Number ..... 1
Using the Manual ..... 1
Left-Hand Side, Right-Hand Side ..... 1
Cab/Canopy ..... 2
Cross References ..... 2
Safety
Safety - Yours and Others ..... 3
Safety Warnings ..... 3
General Safety ..... 3
Clothing and Personal Protective Equipment (PPE) ..... 4

**About the Product**
Introduction
General ..... 5
Name and Address of the Manufacturer ..... 5
Product Compliance ..... 5
Description
General ..... 6
Intended Use ..... 6
Danger Zone ..... 7
Main Component Locations ..... 8
Product and Component Identification
Machine ..... 12
Engine ..... 13
Operator Protective Structure ..... 14
Safety Labels
General ..... 16
Safety Label Identification ..... 17
Operator Station
Component Locations ..... 19
Interior Switches
Ignition Switch ..... 20
Console Switches
General ..... 21
Road Lights ..... 21
Direction Indicators ..... 21
Hazard Warning Lights ..... 21
Front Work Lights ..... 22
Rear Work Lights ..... 22
Horn ..... 22
Beacon ..... 22
Automatic Vibration ..... 22
Manual Regeneration ..... 22
Engine and Vibration Mode Switch ..... 23
Front Vibration ..... 23
Rear Vibration ..... 23

**Operation**

Introduction
General ..... 25
Operating Safety
General ..... 26
Worksite Safety ..... 28
Risk Assessment ..... 29
Walk-Around Inspection
General ..... 31
Entering and Leaving the Operator Station
General ..... 32
Battery Isolator
General ..... 34
Before Starting the Engine
General ..... 35
Operator Seat
General ..... 36
Basic Seat ..... 36
Seat Belt
General ..... 38
Inertia Reel Seat Belt ..... 38
Starting the Engine
General ..... 40
Stopping and Parking
General ..... 43
Safety Equipment
Articulation Lock ..... 45
Drive Controls
Steering Wheel ..... 47
Instruments
Instrument Panel ..... 48
Emissions Control System ..... 53
Getting the Machine Moving
General ..... 58
Slopes
General ..... 59
Operating Levers/Pedals
Basic Controls ..... 60
Working with the Drum
Working without Vibration ..... 62
Working with Vibration ..... 62
Sprinklers and Scrapers ..... 63
Power Sockets
Auxiliary Power Socket ..... 65
Fire Extinguisher
General ..... 66
Moving a Disabled Machine
General ..... 67
Jump-Starting the Engine ..... 67
Retrieval ..... 68
Lifting the Product
General ..... 72

Lifting Points ..... 73
Transporting the Product
General ..... 74
Loading onto the Transporting Vehicle ..... 74
Tie Down Points ..... 76
Operating Environment
General ..... 77
Operating in Low Temperatures ..... 77
Operating in High Temperatures ..... 78
Refuelling
General ..... 79
Filling the Tank ..... 79

**Preservation and Storage**
Cleaning
General ..... 81
Preparation ..... 82
Checking For Damage
General ..... 83
Storage
General ..... 84
Put into Storage ..... 84
During Storage ..... 84
Take out of Storage ..... 85
Security
General ..... 86
Construction Equipment Security and Registration Scheme (CESAR) ..... 86
LiveLink ..... 86

**Maintenance**
Introduction
General ..... 87
Owner/Operator Support ..... 87
Service/Maintenance Agreements ..... 88
Initial Service and Inspection ..... 88
Obtaining Spare Parts ..... 88
Maintenance Safety
General ..... 89
Fluids and Lubricants ..... 90
Maintenance Schedules
General ..... 94
How to Use the Maintenance Schedules ..... 94
Maintenance Intervals ..... 94
Operator Maintenance Tasks ..... 95
Service Engineer Maintenance Tasks ..... 96
Maintenance Positions
General ..... 99
Service Points
General ..... 100
Access Apertures
Engine Compartment Cover ..... 102

Tools
General ..... 103
Body and Framework
General ..... 104
Operator Station
Operator Protective Structure ..... 105
Seat ..... 105
Seat Belt ..... 105
Controls ..... 106
Safety Equipment
Check (Operation) ..... 107
Engine
General ..... 108
Oil ..... 108
Front End Accessory Drive (FEAD) Belt ..... 111
Exhaust ..... 113
Air Filter
General ..... 115
Outer Element ..... 115
Dust Valve ..... 116
Fuel System
General ..... 117
Tank ..... 117
Pre-Filter Element ..... 118
Fuel Filter ..... 119
Cooling System
General ..... 121
Coolant ..... 121
Cooling Pack ..... 124
Brakes
Park Brake ..... 125
Drum
Scraper ..... 126
Sprinkler System ..... 127
Vibration System
General ..... 133
Hydraulic System
General ..... 134
Oil ..... 134
Cylinders / Rams ..... 136
Electrical System
Fuses and Relays ..... 137
General ..... 138
Battery ..... 139
Battery Isolator ..... 140

**Technical Data**
Static Dimensions
Dimensions ..... 141
Weights ..... 143
Performance Dimensions
General ..... 145

Noise Emissions
General ..... 146
Noise Data ..... 146
Vibration Emissions
General ..... 147
Vibration Data ..... 148
Fluids, Lubricants and Capacities
General ..... 149
Fuel ..... 149
Coolant ..... 151
Torque Values
General ..... 152
Electrical System
General ..... 153
Fuses ..... 153
Relays ..... 156
Engine
General ..... 158
Exhaust After Treatment (EAT) ..... 158
Declaration of Conformity
General ..... 160
Data ..... 161
Warranty Information
Service Record Sheet ..... 163

**Acronyms Glossary**

| | |
|---|---|
| CAC | Charge Air Cooler |
| CECE | Committee for European Construction Equipment |
| CESAR | Construction Equipment Security and Registration |
| DOC | Diesel Oxidation Catalyst |
| DPF | Diesel Particulate Filter |
| ECM | Engine Control Module |
| ECU | Electronic Control Unit |
| EGR | Exhaust Gas Recirculation |
| FEAD | Front End Accessory Drive |
| HAV | Hand-Arm Vibration |
| HEST | High Exhaust System Temperature |
| ISO | International Organization for Standardization |
| LED | Light Emitting Diode |
| OAT | Organic Acid Technology |
| PIN | Product Identification Number |
| RMS | Root Mean Square |
| ROPS | Roll-Over Protective Structure |
| RPM | Revolutions Per Minute |

# Introduction
## About this Manual

## Model and Serial Number

This manual provides information for the following model(s) in the JCB machine range:

**Table 1.**

| Model | VIN Prefix<br>Refer to: Machine (Page 12). |
|---|---|
| CT380 [STV] | VTAAX |
| CT430 [STV] | VTBAX |
| CT380 [T4F] | VTABX |
| CT430 [T4F] | VTBBX |

## Using the Manual

The Quick Start Guide or Quick Reference Guide (if supplied) with the machine does not replace the Operator's Manual. You must read all the disclaimers and safety instructions in the Operator's Manual before initially operating the machine.

This Operator's Manual is arranged to give you a good understanding of the machine and its safe operation. It also contains maintenance and technical data.

Read this manual from the front to the back before you use the machine for the first time, even if you have used machines of a similar/same type before as the technical specification, systems and controls of the machine may have changed. Particular attention must be given to all the safety aspects of operating and maintaining the machine.

If there is anything you are not sure about, ask your JCB dealer or employer. Do not guess, you or others could be killed or seriously injured.

The general and specific warnings in this section are repeated throughout the manual. Read all the safety statements regularly, so you do not forget them. Remember that the best operators are the safest operators.

The illustrations in this manual are for guidance only. Where the machines are different, the text and / or the illustration will specify.

The manufacturer's policy is one of continuous improvement. The right to change the specification of the machine without notice is reserved. No responsibility will be accepted for discrepancies which may occur between specifications of the machine and the descriptions contained in this manual.

All the optional equipment included in this manual may not be available in all territories.

## Left-Hand Side, Right-Hand Side

In this manual, 'left' and 'right' mean your left and right when you are seated correctly in the machine.

**Figure 1.**

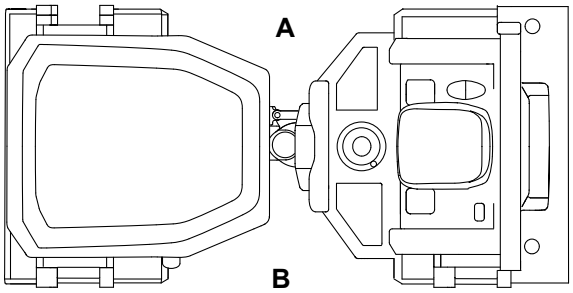


**A** Right **B** Left

## Cab/Canopy

This manual frequently makes references to the cab. For example, 'do not operate the machine without an operator's manual in the cab'. These statements also apply to canopy build machines.

## Cross References

In this manual, cross references are made by presenting the subject title in blue (electronic copy only). The number of the page upon which the subject begins is indicated within the brackets. For example:
Refer to: Cross References (Page 2).

# Safety

## Safety - Yours and Others

All machinery can be hazardous. When a machine is correctly operated and maintained, it is a safe machine to work with. When it is carelessly operated or poorly maintained it can become a danger to you (the operator) and others.

In this manual and on the machine you will find warning messages, you must read and understand them. They inform you of potential hazards and how to avoid them. If you do not fully understand the warning messages, ask your employer or JCB dealer to explain them.

Safety is not just a matter of responding to the warnings. All the time you are working on or with the machine you must be thinking of what hazards there might be and how to avoid them.

Do not work with the machine until you are sure that you can control it.

Do not start any work until you are sure that you and those around you will be safe.

If you are not sure of anything, about the machine or the work, ask someone who knows. Do not assume anything.

Remember:

- Be careful.
- Be alert.
- Be safe.

## Safety Warnings

In this manual there are safety notices. Each notice starts with a signal word. The signal word meanings are given below.

The signal word 'DANGER' indicates a hazardous situation which, if not avoided, will result in death or serious injury.

The signal word 'WARNING' indicates a hazardous situation which, if not avoided, could result in death or serious injury.

The signal word 'CAUTION' indicates a hazardous situation which, if not avoided, could result in minor or moderate injury.

The signal word 'Notice' indicates a hazardous situation which, if not avoided, could result in machine damage.

The safety alert system symbol (shown) also helps to identify important safety messages in this manual. When you see this symbol your safety is involved, carefully read the message that follows.

**Figure 2. The safety alert system symbol**



## General Safety

### Training

To operate the machine safely you must have received the appropriate training. The operator's manual instructs you on the machine, its controls and its safe operation; it is not a training manual. Ensure that you receive the correct training before operating the machine. Failure to do so will result in incorrect operation of the machine and you will be putting yourself and others at risk. You must abide by all local site regulations. Make sure that you and your machine comply with relevant local laws and jobsite requirements – it is your responsibility.

**Clothing**

You can be injured if you do not wear the correct clothing. Loose clothing can get caught in the machinery. Keep cuffs fastened. Do not wear a necktie or scarf. Keep long hair restrained. Remove rings, watches and personal jewellery.

**Care and Alertness**

All the time you are working with or on the machine, take care and stay alert.

**Alcohol and Drugs**

It is extremely dangerous to operate machinery when under the influence of alcohol or drugs. Do not consume alcoholic drinks or take drugs before or while operating the machine or attachments. Be aware of medicines which can cause drowsiness.

**Feeling Unwell**

Do not attempt to operate the machine if you are feeling unwell. By doing so you could be a danger to yourself and those you work with.

**Mobile Phones**

Switch off your mobile phone before entering an area with a potentially explosive atmosphere. Sparks in such an area could cause an explosion or fire resulting in death or serious injury.

Switch off and do not use your mobile phone when refuelling the machine.

**Lifting Equipment**

You can be injured if you use incorrect or faulty lifting equipment. You must identify the weight of the item to be lifted then choose lifting equipment that is strong enough and suitable for the job. Make sure that lifting equipment is in good condition and complies with all local regulations.

**Raised Equipment**

Never walk or work under raised equipment unless it is supported by a mechanical device. Equipment which is supported only by a hydraulic device can drop and injure you if the hydraulic system fails or if the control is operated (even with the engine stopped).

Make sure that no-one goes near the machine while you install or remove the mechanical device.

**Raised Machine**

Never position yourself or any part of your body under a raised machine which is not correctly supported. If the machine moves unexpectedly you could become trapped and suffer serious injury or be killed.

**Lightning**

Lightning can kill you. Do not use the machine if there is lightning in your area.

**Machine Modifications**

This machine is manufactured in compliance with prevailing legislative requirements. It must not be altered in any way which could affect or invalidate its compliance. For advice consult your JCB dealer.

## Clothing and Personal Protective Equipment (PPE)

Do not wear loose clothing or jewellery that can get caught on controls or moving parts. Wear protective clothing and personal safety equipment issued or called for by the job conditions, local regulations or as specified by your employer.

# About the Product
## Introduction

### General

Before you start using the machine, you must know how the machine operates. Use this part of the manual to identify each control lever, switch, gauge, button and pedal. Do not guess, if there is anything you do not understand, ask your JCB dealer.

### Name and Address of the Manufacturer

JCB Vibromax GmbH, Europaallee 113a, 50226 Frechen, Germany.

### Product Compliance

Your JCB product was designed to comply with the laws and regulations applicable at the time of its manufacture for the market in which it was first sold. In many markets, laws and regulations exist that require the owner to maintain the product at a level of compliance relevant to the product when first produced. Even in the absence of defined requirements for the product owner, JCB recommend that the product compliance be maintained to ensure safety of the operator and exposed persons and to ensure the correct environmental performance. Your product must not be altered in any way which could affect or invalidate any of these requirements. For advice consult your JCB dealer.

For its compliance as a new product, your JCB and some of its components may bear approval numbers and markings, and may have been supplied with a Declaration/Certificate of Conformity. These markings and documents are relevant only for the country/region in which the product was first sold to the extent that the laws and regulations required them.

Re-sales and import/export of products across territories with different laws and regulations can cause new requirements to become relevant for which the product was not originally designed or specified. In some cases, pre-owned products irrespective of their age are considered new for the purposes of compliance and may be required to meet the latest requirements which could present an insurmountable barrier to their sale/use.

Despite the presence of any compliance related markings on the product and components, you should not assume that compliance in a new market will be possible. In many cases it is the person responsible for import of a pre-owned product into a market that becomes responsible for compliance and who is also considered the manufacturer.

JCB may be unable to support any product compliance related enquiry for a product which has been moved out of the legislative country/region where it was first sold, and in particular where a product specification change or additional certification would have been required in order for the product to be in compliance.

# Description

## General

The JCB Tandem roller machine is a self-propelled, vibratory tandem drum rollers which is powered by a 3 cylinder, diesel engine.

The machine is designed for compacting soil types ranging from stones to silty sand, or asphalt construction materials when rolling over the subgrade in a forward or reverse direction (with or without vibration).

Four scrapers (two on each drum) are mounted on the machine and sprinkler bars are fitted to the front and rear drums. The spray nozzles and the bar end caps are removable for easy cleaning.

The hydrostatic drive system allows for infinitely variable travel speeds. The drive motors (one motor mounted on the left side of each drum) are connected in parallel. The machine is always driven with all drum drive. Each motor incorporates a spring on, pressure off brake system which engages when the machine is in neutral. The drive motor hoses are protected inside steel frame plates.

A hydraulic system is also used to operate the vibratory shafts. Designed with an overturning weight system on the vibratory shafts, the machine has selectable front drum, rear drum or both drums vibration. The machine operates at a vibratory frequency of 60 Hz and a nominal amplitude of 0.5 mm.

The machine has an articulated steering system giving a tight turning radius.

## Intended Use

The machine is intended to be used in normal environmental conditions as described in this manual. Normally the machine is designed only for compacting beds of earth or bituminous construction when running over the subgrade in the forward or reverse direction, with or without vibration. These compacting material include soil types ranging from stones to silty sand,and having water contents ranging from 40% to 110% of the optimum water content. These figures are in accordance to the standard Proctor test DIN 18127.

Application also include road and pavement construction, sub-soil compaction and similar applications:

- General and infrastructure construction.
- Site preparation.
- Landfill work.
- Building industry.
- Urban Road Construction.

Soil of fine-grained or soils having higher water contents require a qualified trial compaction.

Use for which it is not intended includes, in particular:

- It is not permissible to drive on a high gradient which is greater than the permissible gradient of the machine.
- Before driving on a gradient, it is still necessary to check, at the start of the gradient as seen in the intended driving direction, whether there is adequate frictional engagement between the drums and the roadway, i.e. whether, on the gradient, the machine can be driven uphill with medium acceleration and can be braked downhill.
- It is not permissible to drive on a gradient if the drums skid during braking, vibration at standstill and vibrating travel on blocks, rocks, concrete or frozen soil.
- Vibrating travel in the vicinity of buildings if this could damage parts or installations; This should normally be assumed for vibrational speeds of 8 mm/s or more at the endangered parts.
- Operation in extraordinary applications (see below) without additional safety measures.
- Driving from above onto an untested gradient.
- Driving on a subgrade having a gradient greater than the permissible gradient in a direction other than the incline direction.
- Use of the roller other than from the operator's seat.

The machine is intended to be used only on a subgrade gradient up to the permissible gradient.
Refer to: Slopes (Page 59).

Refer to: Performance Dimensions (Page 145).

The machine is intended to be used at a working speed of 2–5km/h (1.2–3.1mph) on level ground and 2–3km/h (1.2–1.9mph) on gradient.

Extraordinary applications are, in particular:

- Work on a subgrade having a gradient greater than the permissible gradient.
- Work on the edges of hillsides or trenches.
- Work in regions having continuous construction site traffic.

Additional safety measures can be:

- Securing by means of ropes attached to winches or accompanying heavy construction vehicles.
- Adequate escape lanes.
- Appointment of guides.
- Testing the function of the brakes when first driving onto the gradient at the lower end of the gradient
- Correspondingly: testing the directional stability of the longitudinal axis of the roller when switching on the vibration.

The manufacturer/supplier is not liable for damage resulting from such use. The user alone bears the risk.

If the machine is to be used in applications where there is a high silica concentration, risk due to materials containing asbestos or similar environment based hazards, additional protective measures such as the use of PPE may be required.

The machine should not be operated by any person who does not have an appropriate level of qualification, training or experience of use of this type of machine.

Prior to use of the machine, its suitability (size, performance, specification etc.) should be considered with regards to the intended application and any relevant hazards that may exist. Contact your JCB dealer for support in determining the appropriate JCB machine, attachment and any optional equipment that is suitable for the application and environment.

It is also intended that the instruction manual is observed and that the servicing and maintenance regulations are followed.

## Danger Zone

The danger zone is any zone within and/or around the machinery in which a person is subject to a risk to their health or safety. During operation of the machine, keep all persons out of the danger zone. Persons in the danger zone could be injured.

Before you do a maintenance task, make the product safe.
Refer to: Maintenance Positions (Page 99).

## Main Component Locations

For: CT380 [STV PUN], CT430 [STV PUN] ..... Page 8
For: CT380 [T4F PUN], CT430 [T4F PUN] ..... Page 10

(For: CT380 [STV PUN], CT430 [STV PUN])

**Figure 3.**

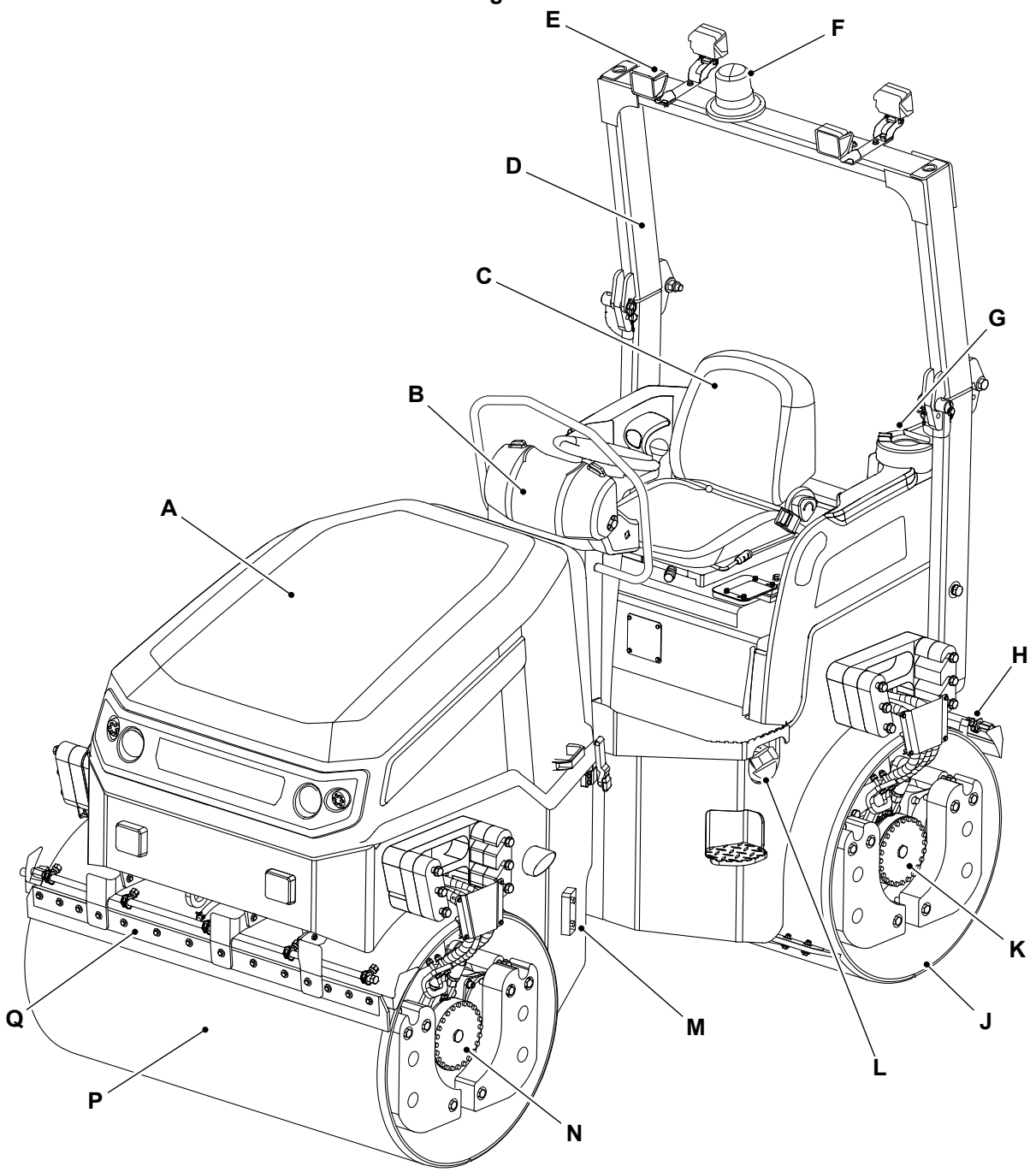


**A** Engine compartment cover
**B** Instrument panel and switches
**C** Operator seat
**D** ROPS (Roll-Over Protective Structure)
**E** Work lamp
**F** Beacon
**G** Water tank filler cap
**H** Scraper
**J** Smooth drum (rear)
**K** Drum drive motor (rear)
**L** Fuel filler cap
**M** Hydraulic tank oil indicator

**N** Drum drive motor (front)
**P** Smooth drum (front)
**Q** Scraper

**Figure 4.**

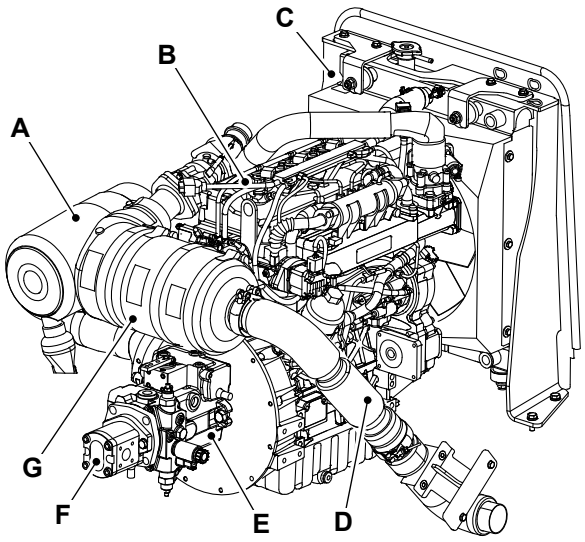


**A** Air cleaner
**B** Engine
**C** Cooler
**D** Exhaust Muffler
**E** Travel Pump
**F** Gear Pump
**G** After treatment System

(For: CT380 [T4F PUN], CT430 [T4F PUN])

**Figure 5.**

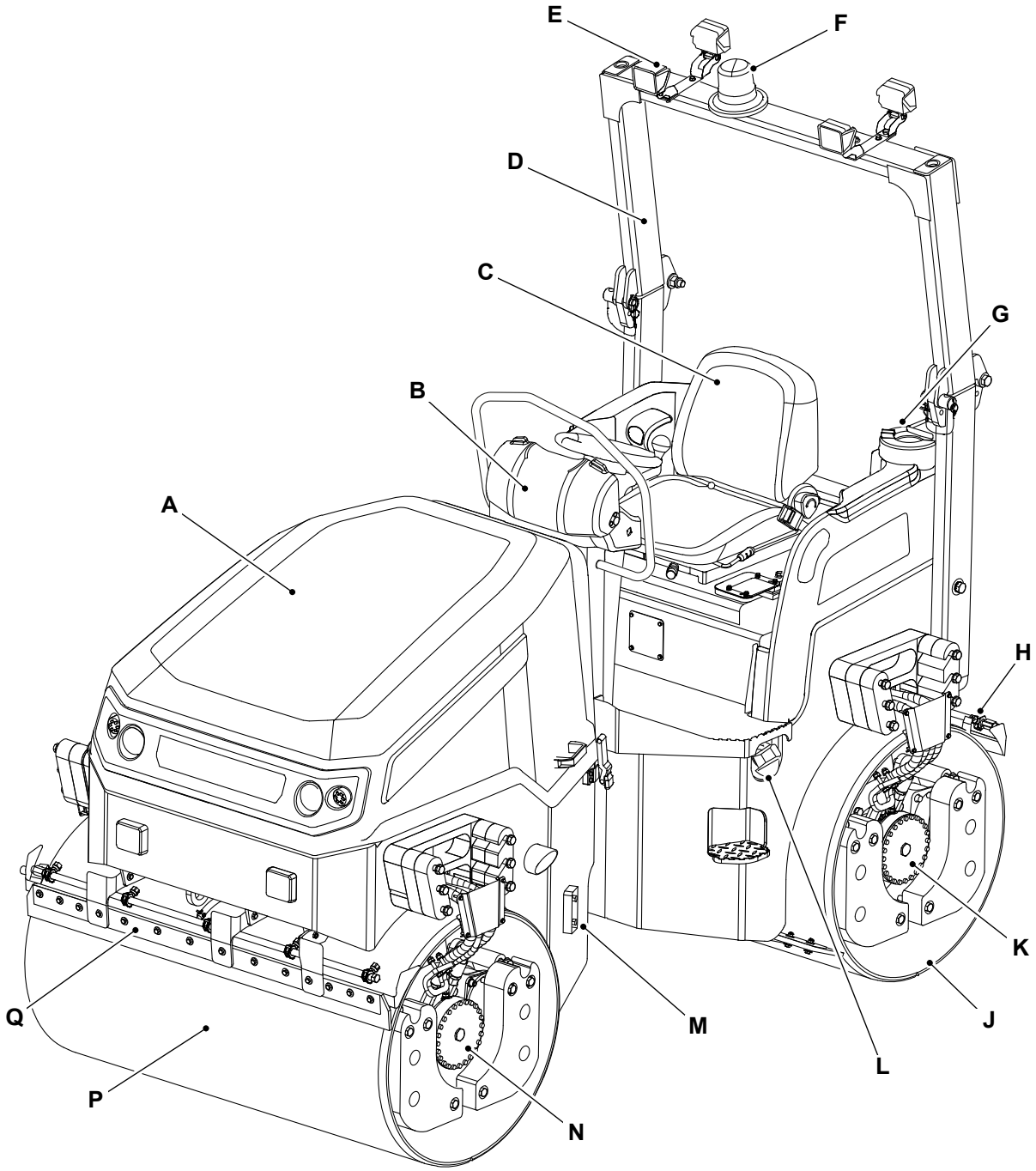


**A** Engine compartment cover
**B** Instrument panel and switches
**C** Operator seat
**D** ROPS
**E** Work lamp
**F** Beacon
**G** Water tank filler cap
**H** Scraper
**J** Smooth drum (rear)
**K** Drum drive motor (rear)
**L** Fuel filler cap
**M** Hydraulic tank oil indicator
**N** Drum drive motor (front)
**P** Smooth drum (front)
**Q** Scraper

**Figure 6.**

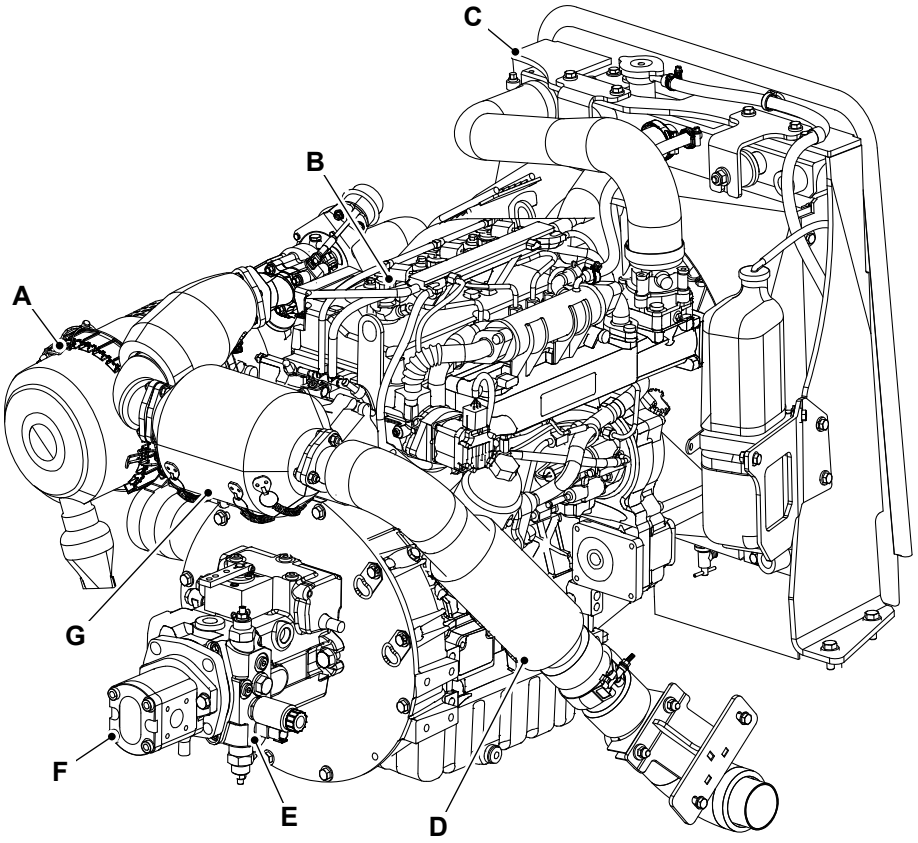


**A** Air cleaner
**B** Engine
**C** Cooler
**D** DOC (Diesel Oxidation Catalyst) exhaust pipe
**E** Travel Pump
**F** Gear Pump
**G** DOC

# Product and Component Identification

## Machine

Your machine has an identification plate. The PIN (Product Identification Number), weight, engine power, year of manufacture and serial number of the machine are shown on the identification plate. The identification plate can be found on the front face of the seat platform.

**Figure 7.**

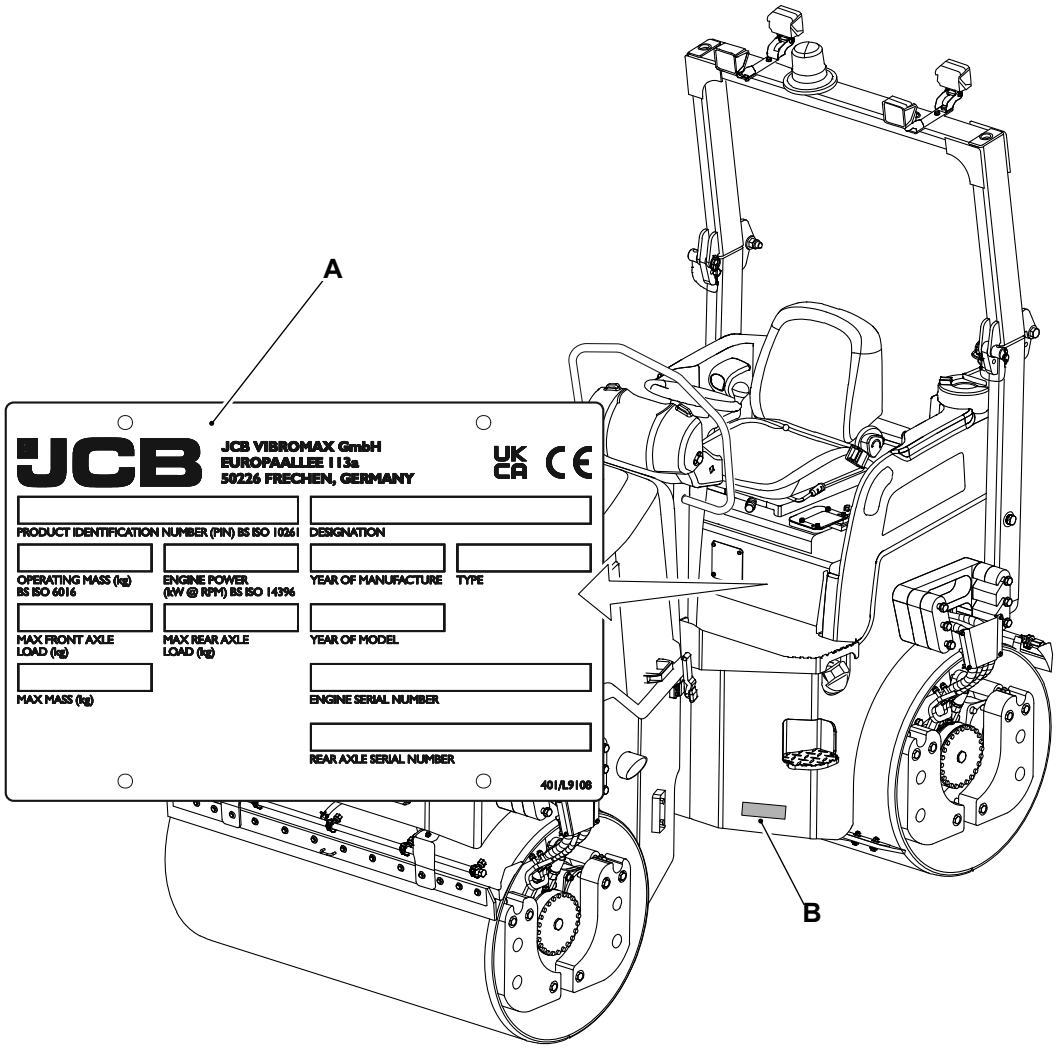


**A** Machine data plate **B** Stamped PIN

The machine model and build specification are indicated by the PIN. The PIN has 17 digits and must be read from left to right.

**Table 2. Typical PIN**

| | | | | |
|---|---|---|---|---|
| PUN | VTAAX | J | H | 2556351 |

**Table 3. Explanation of the PIN**

| Digit | Description |
|---|---|
| 1 to 3 | World manufacturer identification. For example, PUN = Pune Build. |
| 4 to 8 | Machine type and model. For example, VTAAX=CT380 [STV], VTBAX=CT430 [STV], VTABX=CT380 [T4F] and VTBBX=CT430 [T4F]. |
| 9 | Random check letter. The check letter is used to verify the authenticity of a machine's PIN. |

| Digit | Description |
|---|---|
| 10 | Year of manufacture. For example, H = 2018. |
| 11 to 17 | Machine serial number. |

## Engine

For: CT380 [STV PUN], CT430 [STV PUN] ..... Page 13
For: CT380 [T4F PUN], CT430 [T4F PUN] ..... Page 13

### (For: CT380 [STV PUN], CT430 [STV PUN])

The engine emission label is located on side of engine. Refer to Figure 8.

The engine data label is located on the engine crankcase near LDPTO ( Light Duty Power Take-Off). Refer to Figure 8.

**Figure 8.**

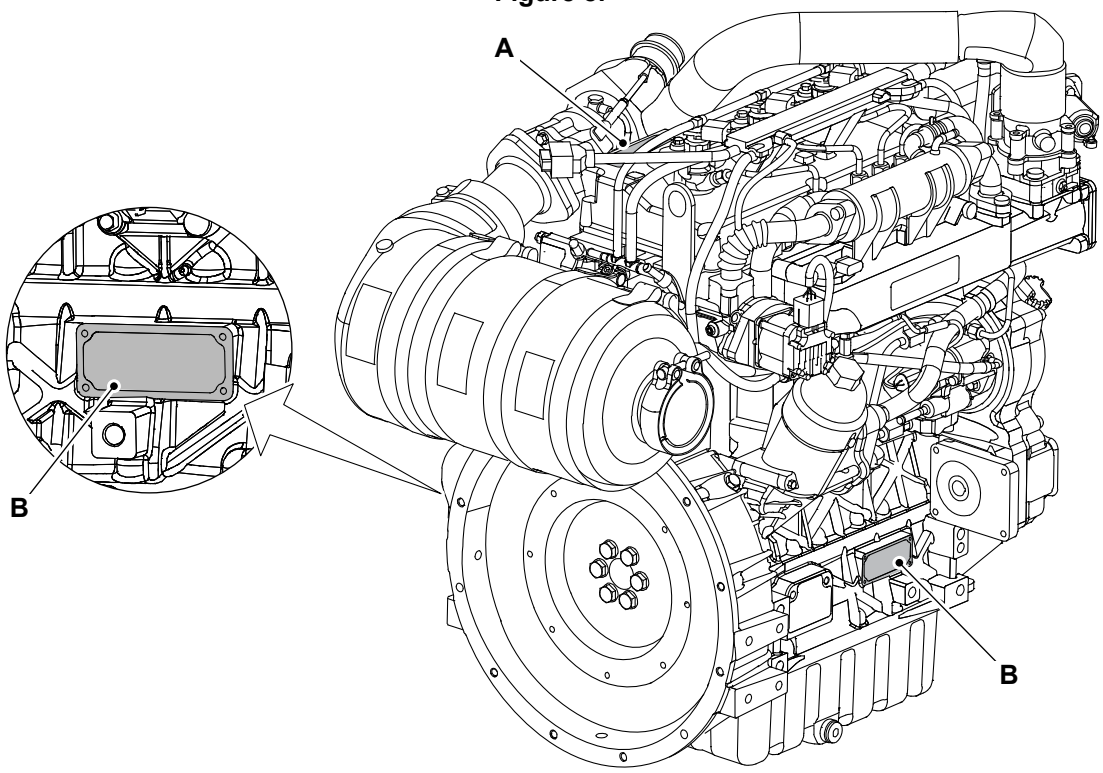


**A** Engine emission label

**B** Engine data label

### (For: CT380 [T4F PUN], CT430 [T4F PUN])

The engine emission label is located on side of engine. Refer to Figure 9.

The engine data label is located on the engine crankcase near LDPTO ( Light Duty Power Take-Off). Refer to Figure 9.

**Figure 9.**

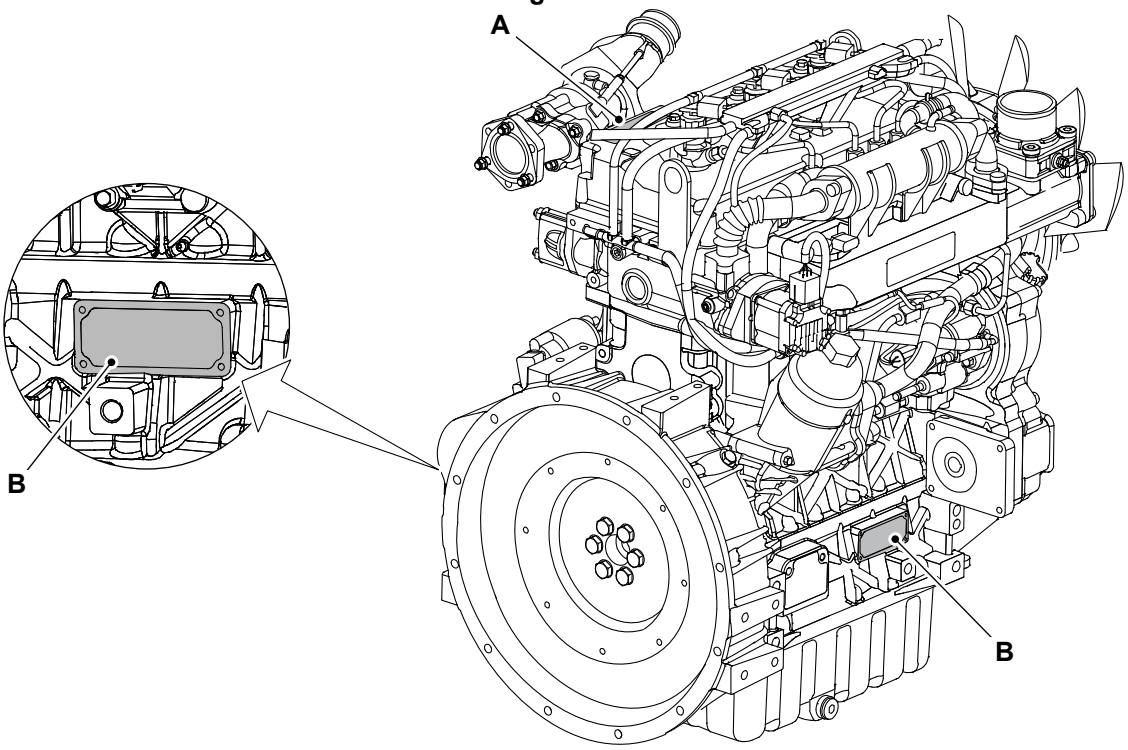


**A** Engine emission label

**B** Engine data label

## Operator Protective Structure

⚠ **WARNING** You could be killed or seriously injured if you operate a machine with a damaged or missing ROPS. If the ROPS has been in an accident, do not use the machine until the structure has been renewed. Modifications and repairs that are not approved by the manufacturer may be dangerous and will invalidate the ROPS.

**WARNING** Do not operate the machine with the ROPS in the folded position except while working within a building or orchard where vertical space is limited. Take extreme care when operating the machine with the ROPS in the folded position. Make sure that the ROPS is unfolded after completion of the work.

Machine built to the ROPS (Roll-Over Protective Structure) standard and has data plate attached to lower left side of ROPS frame.

**Figure 10.**

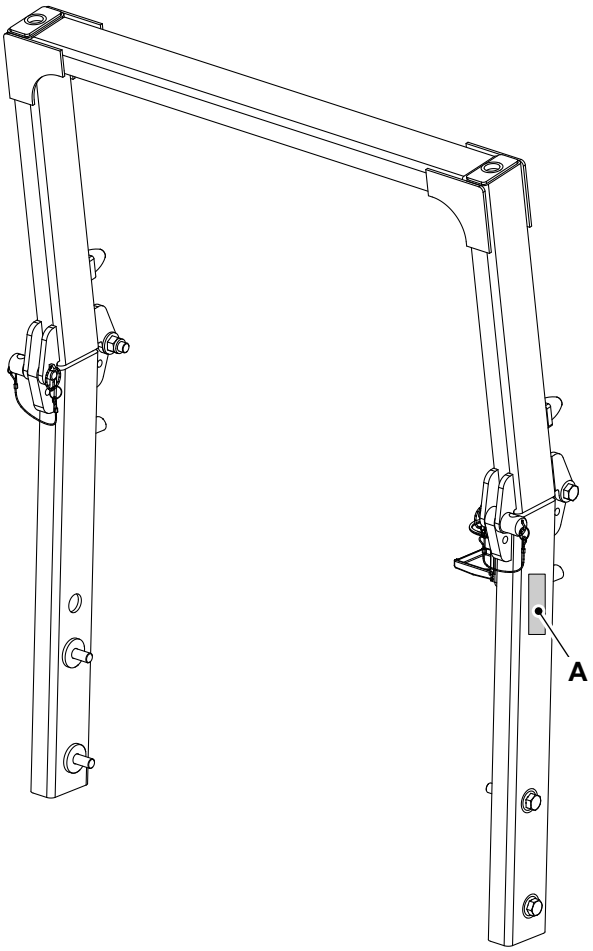


**A** Data plate

**Figure 11. Typical Data Plate**

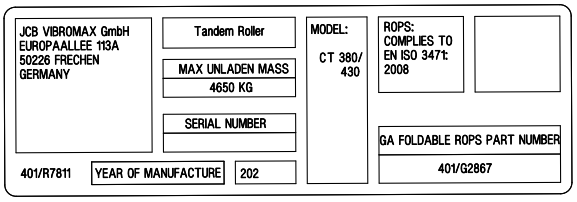

# Safety Labels

## General

⚠ **WARNING** Safety labels on the machine warn you of particular hazards. You can be injured if you do not obey the safety instructions shown.

The safety labels are strategically placed around the machine to remind you of possible hazards.

If you need eye-glasses for reading, make sure you wear them when reading the safety labels. Do not over-stretch or put yourself in dangerous positions to read the safety labels. If you do not understand the hazard shown on the safety label, then refer to Safety Label Identification.

Keep all of the safety labels clean and readable. Replace a lost or damaged safety label. Make sure the replacement parts include the safety labels where necessary. Each safety label has a part number printed on it, use this number to order a new safety label from your JCB dealer.

## Safety Label Identification

**Figure 12.**

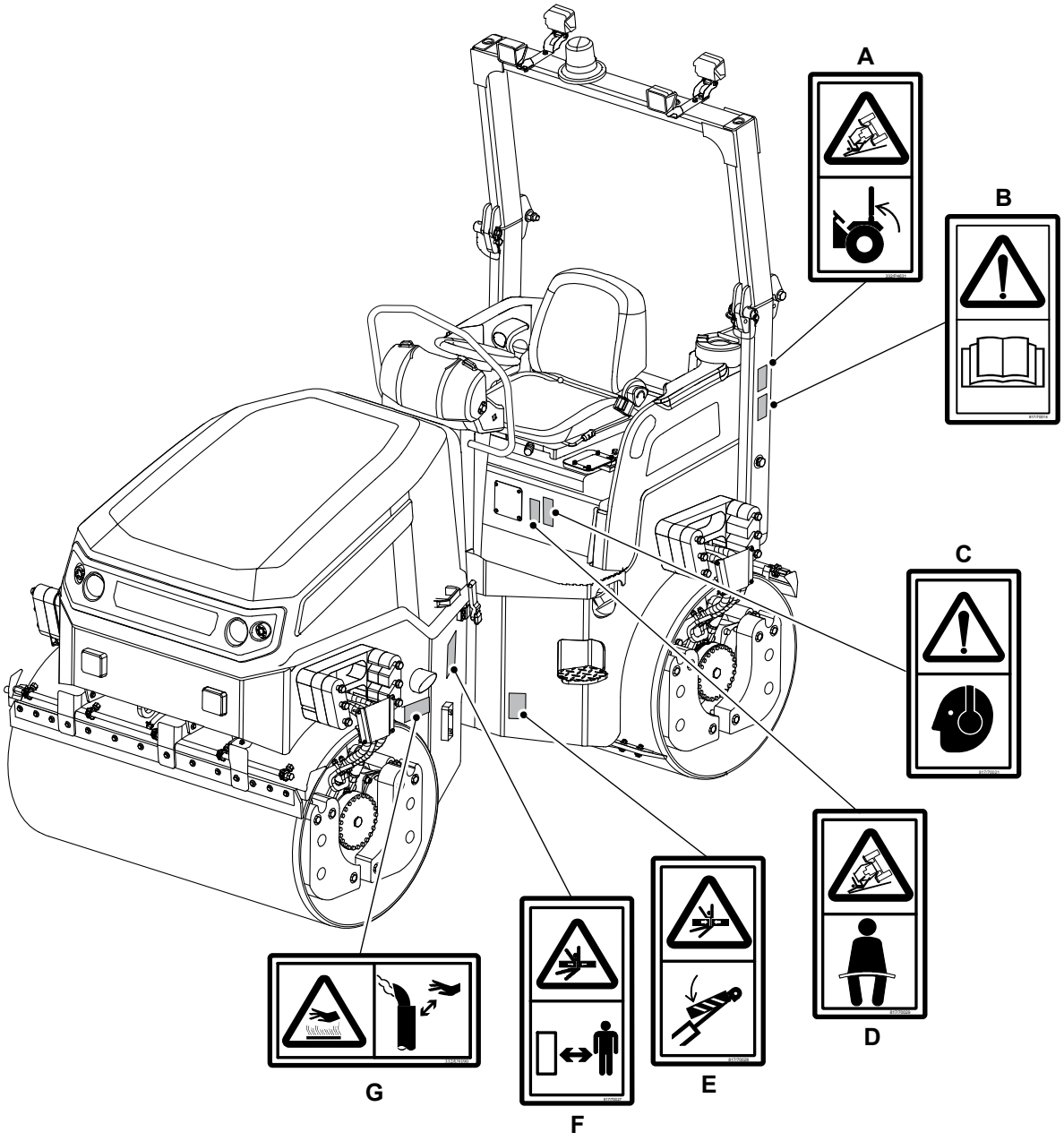

**Figure 13.**

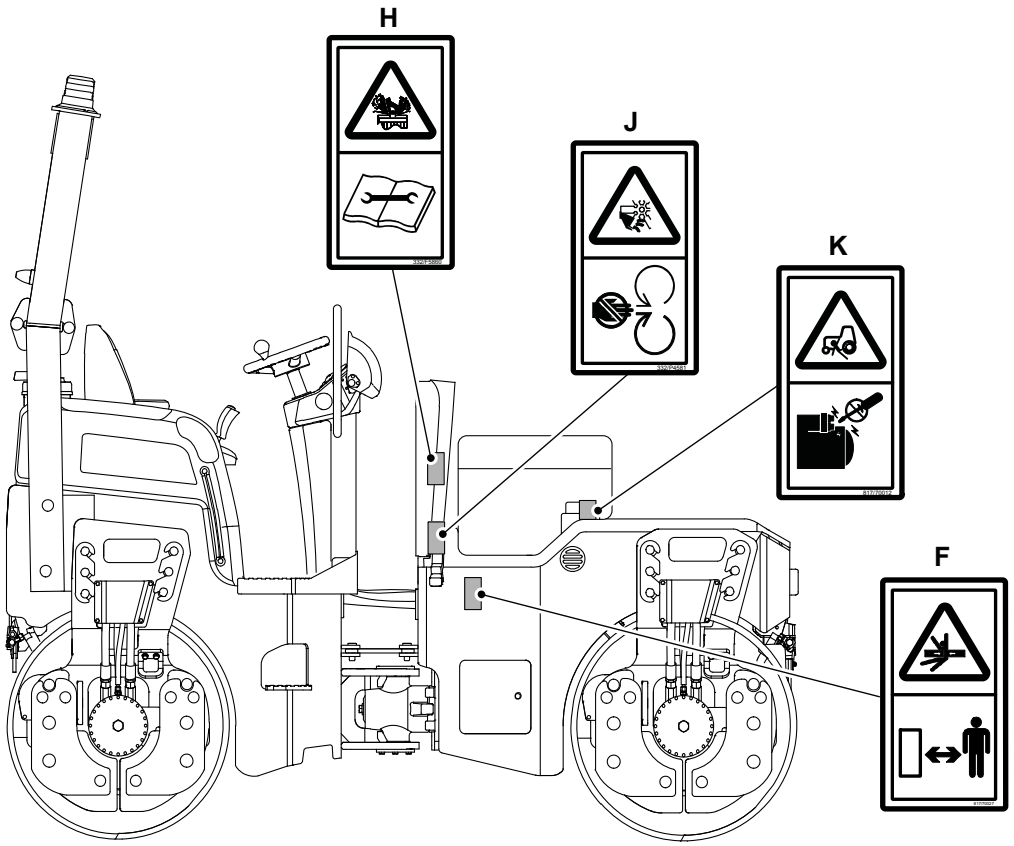


**Table 3. Safety Labels**

| Item | Part No. | Description | Qty. |
|---|---|---|---|
| A | 332/P4631 | Warning. Crush hazard. Operate with the ROPS (Roll-Over Protective Structure) frame in the upright position where a risk of rollover exists. | 1 |
| B | 817/70014 | Warning. Read the Operator’s Manual before you operate the machine. | 1 |
| C | 817/70021 | Noise warning. Wear ear protection. | 1 |
| D | 817/70029 | Warning. Crush hazard. Wear seat belt. | 1 |
| E | 817/70028 | Crushing of whole body. Insert the articulated frame lock during maintenance and shipping. | 1 |
| F | 817/70027 | Warning. Crushing of whole body. Keep a safe distance. | 2 |
| G | 332/U9190 | Warning. Engine exhaust. Burn to fingers and hands. Stay a safe distance away. | 1 |
| H | 332/F5860 | Warning. Hot fluid under pressure. Read the Operator's Manual. | 2 |
| J | 332/P4581 | Warning. Severing of hands and fingers. Keep clear off /do not reach into rotating parts. | 4 |
| K | 817/70012 | Run over hazard. Start the engine from the operator's seat only. Do not short across the terminals. | 1 |

# Operator Station

## Component Locations

Figure 14.

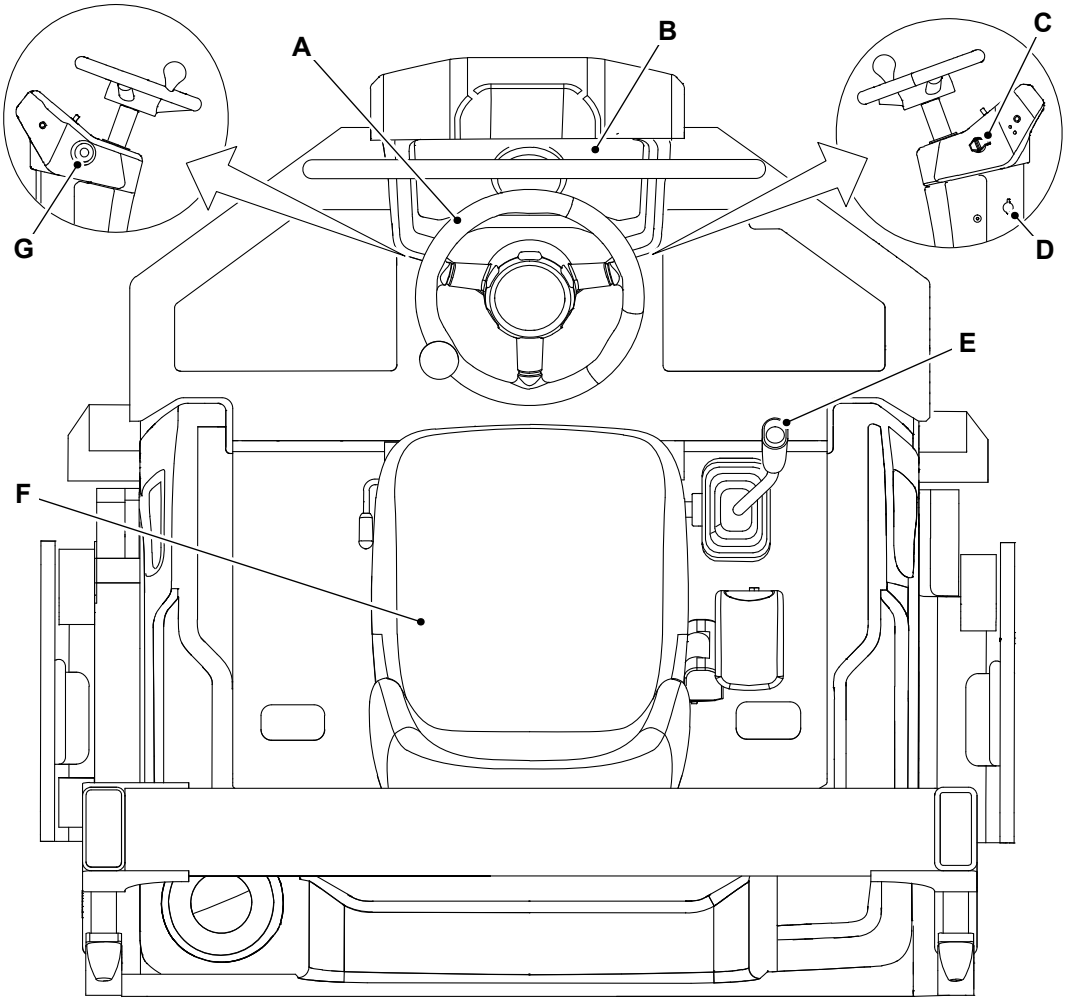


**A** Steering wheel
Refer to: Steering Wheel (Page 47).
**B** Front console switches and instrument panel
Refer to: Console Switches (Page 21).
**C** Ignition switch
Refer to: Ignition Switch (Page 20).
**D** Auxiliary power socket
Refer to: Auxiliary Power Socket (Page 65).
**E** Drive lever
Refer to: Basic Controls (Page 60).
**F** Operator seat
Refer to: Operator Seat (Page 36).
**G** Emergency stop button
Refer to: Stopping and Parking (Page 43).

# Interior Switches

## Ignition Switch

⚠ **Notice:** Do not operate the starter motor for more than 20s at one time. Let the starter motor cool for at least 2min.

The ignition key operates the three-position ignition switch. The ignition key can only be inserted or removed in position 0.

If the engine fails to start, the ignition key must be returned to position 0 before the starter motor is re-engaged.

If the engine fires but does not fully start, let the starter motor cool for at least 2 min between.

**Figure 15.**

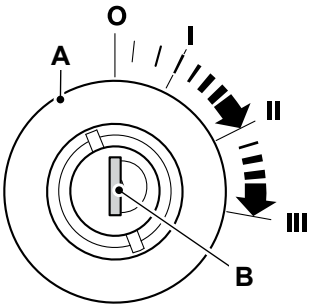


**A** Ignition switch **B** Ignition key

**Table 4. Switch Positions**

| Position | Function |
|---|---|
| 0 | Off/Stop the Engine: Turn the ignition key to this position to stop the engine. Make sure the controls are in neutral. |
| I | On: Turn the ignition key to this position to connect the battery to all of the electrical circuits. The ignition key will return to this position when it is released from position II or position III. |
| II | Heat position. Turn the ignition key to this position to operate the glow plug or grid heater for the appropriate time. |
| III | Start: Turn the ignition key to this position to operate the starter motor and turn the engine. The ignition switch has an inhibitor to stop the ignition switch being turned ON when the engine is running. |

# Console Switches

## General

The installed switches and their positions can change according to the specification of the machine.

Each switch has a graphic symbol to show the function of the switch. Before you operate a switch, make sure that you understand its function.

The rocker switches have two or three positions (as shown).

If the switch has a backlight, then the graphic symbol illuminates when the ignition switch or side lights are in the on position.

The light bar illuminates to show that the switch function is active.

**Figure 16.**

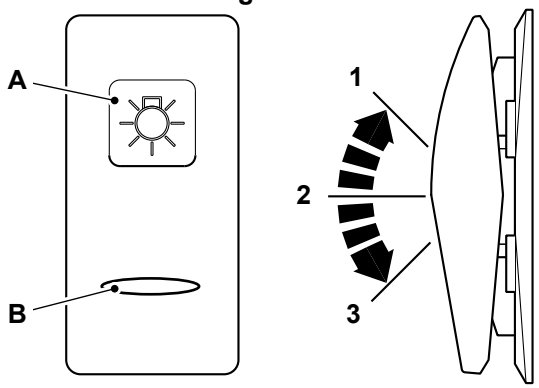


**A** Graphic symbol

**B** Light bar

## Road Lights

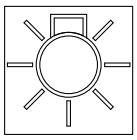

Two position rocker switch. The switch functions to operate when the ignition is in the on position.
Position : 1 = Off
Position : 2 = Headlights, rear tail lights and front work lights are on.

## Direction Indicators

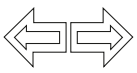

Three position rocker switch. The switch functions operate when the ignition switch is in the on or off position.
Position : 1 = Left turn indicators
Position : 2 = Off
Position : 3 = Right turn indicators.

## Hazard Warning Lights



Two position rocker switch. The switch functions operate when the ignition switch is in the on and off positions.
Position : 1 = Off
Position : 2 = On. A light on the instrument panel flashes with the outside lights.

## Front Work Lights



Two position rocker switch. The switch functions operate when the ignition switch is in the on position.
Position : 1 = Off
Position : 2 = Front work light on (LED work light option).

## Rear Work Lights

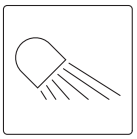

Two position rocker switch. The switch functions operate when the ignition switch is in the on position.
Position **1**: Off
Position **2**: Rear work light on (standard and LED option).

## Horn

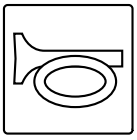

Spring loaded rocker switch. Press switch to operate the horn.
Position **1**: On

## Beacon

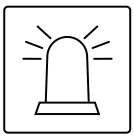

Two position rocker switch. The switch functions operate when the ignition switch is in the On and Off positions.
Position : 1 = Off
Position : 2 = Beacon On

## Automatic Vibration




Three position rocker switch. The switch functions operate when the ignition switch is in the on position.
Position : 1 = Auto
Position : 2 = Off
Position : 3 = Manual

## Manual Regeneration

(For: CT380 [STV PUN], CT430 [STV PUN])

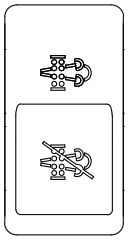

Three position rocker switch.
Position : 1 = Manual regeneration (momentary return).
Position : 0 = Automatic regeneration (default position).
Position : 2 = Regeneration Inhibit.

## Engine and Vibration Mode Switch




Three position rocker switch for Engine and Vibration mode selection. The switch functions operate when the ignition switch is in the on position, and the switch also controls the vibration frequency.
Position **MIN**: Low engine RPM
Position **ECO**: Economy engine RPM (50 Hz vibration frequency)
Position **MAX**: High engine RPM (60 Hz vibration frequency)

## Front Vibration

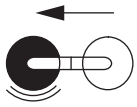

Two position rocker switch. The switch functions operate when the ignition switch is in the on position.
Position **1**: Off
Position **2**: Front vibration on.

## Rear Vibration

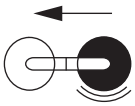

Two position rocker switch. The switch functions operate when the ignition switch is in the on position.
Position **1**: Off
Position **2**: Rear vibration on.

Notes:

# Operation
# Introduction

## General

The aim of this part of the manual is to guide the operator step-by-step through the task of learning how to operate the machine efficiently and safely. Read the "Operation" section thoroughly from beginning to end.

The operator must always be aware of events happening in or around the machine. Safety must always be the most important factor when you operate the machine. Driver aids must not be relied on.

When you understand the operating controls, gauges and switches, practice using them. Drive the machine in an open space, clear of people. Get to know the 'feel' of the machine and its driving controls.

Do not rush the job of learning, make sure you fully understand everything in the "Operation" section. Take your time and work efficiently and safely.

Remember:

- Be careful.
- Be alert.
- Be safe.

# Operating Safety

## General

### Training

Make sure that you have had adequate training and that you are confident in your ability to operate the machine safely before you use it. Practice using the machine and its attachments until you are completely familiar with the controls and what they do. Where applicable you may be required to show competency to a national certification scheme. Ensure you comply with local legislation and jobsite rules. With a careful, well trained and experienced operator, your machine is a safe and efficient machine. With an inexperienced or careless operator, it can be dangerous. Do not put your life, or the lives of others, at risk by using the machine irresponsibly. Before you start to work, tell your colleagues what you will be doing and where you will be working. On a busy site, use a signalman.

Before doing any job not covered in this manual, find out the correct procedure. Your local JCB distributor will be glad to advise you.

### Fuel

Fuel is flammable, keep naked flames away from the fuel system. Stop the engine immediately if a fuel leak is suspected. Do not smoke while refuelling or working on the fuel system. Do not refuel with the engine running. Completely wipe off any spilt fuel which could cause a fire. There could be a fire and injury if you do not follow these precautions.

### Machine Condition

A defective machine can injure you or others. Do not operate a machine which is defective or has missing parts. Make sure the maintenance procedures in this manual are completed before using the machine.

### Machine Limits

Operating the machine beyond its design limits can damage the machine, it can also be dangerous. Do not operate the machine outside its limits. Do not try to upgrade the machine performance with unapproved modifications or additional equipment.

### Engine/Steering Failure

If the engine or steering fails, stop the machine as quickly as possible. Do not operate the machine until the fault has been corrected.

### Exhaust Gases

Machine exhaust gases can harm and possibly kill you or bystanders if they are inhaled. Do not operate the machine in closed spaces without making sure there is good ventilation. If possible, install an exhaust extractor. If you begin to feel drowsy, stop the machine at once and get into fresh air.

### Worksites

Worksites can be hazardous. Examine the site before working on it. You could be killed or injured if the ground gives way under your machine or if piled material collapses onto it. Check for potholes and hidden debris, logs, ironwork etc. Any of these could cause you to lose control of your machine. Check for utilities such as electric cables (overhead and underground), gas and water pipes etc. Mark the positions of the underground cables and pipes. Make sure that you have enough clearance beneath overhead cables and structures.

If the machine is used in coordination with other machines, vehicles and/or people on the jobsite the operator must follow jobsite organisation rules.

### Communications

Bad communications can cause accidents. Keep people around you informed of what you will be doing. If you will be working with other people, make sure any hand signals that may be used are understood by everybody. Worksites can be noisy, do not rely on spoken commands.

You must stop the machine operation, isolate the controls and turn off the machine when persons are required to interact with it.

### Parking

An incorrectly parked machine can move without an operator. Follow the instructions in the Operator's Manual to park the machine correctly.

### Banks and Trenches

Banked material and trenches can collapse. Do not work or drive too close to banks and trenches where there is danger of collapse.

**Safety Barriers**

Unguarded machines in public places can be dangerous. In public places, or where your visibility is reduced, place barriers around the work area to keep people away.

**Sparks**

Explosions and fire can be caused by sparks from the exhaust or the electrical system. Do not use the machine in closed areas where there is flammable material, vapour or dust.

**Hazardous Atmospheres**

This machine is designed for use in normal outdoor atmospheric conditions. It must not be used in an enclosed area without adequate ventilation. Do not use the machine in a potentially explosive atmosphere, i.e. combustible vapours, gas or dust, without first consulting your JCB dealer.

**Regulations**

Obey all laws, worksite and local regulations which affect you and your machine.

**Electrical Power Cables**

You could be electrocuted or badly burned if you get the machine or its attachments too close to electrical power cables.

You are strongly advised to make sure that the safety arrangements on site comply with the local laws and regulations concerning work near electric power lines.

Before you start using the machine, check with your electricity supplier if there are any buried power cables on the site.

There is a minimum clearance required for working beneath overhead power cables. You must obtain details from your local electricity supplier.

**Working Platform**

Using the machine as a working platform is hazardous. You can fall off and be killed or injured. Never use the machine as a working platform unless with approved man-basket or man-crate (if applicable).

**Machine Safety**

Stop work at once if a fault develops. Abnormal sounds and smells can be signs of trouble. Examine and repair before resuming work.

**Hot Components**

Touching hot surfaces can burn skin. The engine and machine components will be hot after the unit has been running. Allow the engine and components to cool before servicing the unit.

**Travelling at High Speeds**

Travelling at high speeds can cause accidents. Always travel at a safe speed to suit working conditions.

**Hillsides**

Operating the machine on hillsides can be dangerous if the correct precautions are not taken. Ground conditions can be changed by rain, snow, ice etc. Check the site carefully. When applicable, keep all attachments low to the ground.

**Visibility**

Accidents can be caused by working in poor visibility. Use your lights to improve visibility. Keep the road lights, windows, mirrors and cameras clean (when fitted).

Do not operate the machine if you cannot see clearly.

Modification of the machine's configuration by the user (e.g. the fitting of large and non-approved attachments) may result in a restriction of the machine visibility.

**Hands and Feet**

Keep all parts of your person inside the machine.

When using the machine, keep all parts of your person clear of moving parts. Keep all parts of your person within the operator compartment while the vehicle is in motion.

**Controls**

You or others can be killed or seriously injured if you operate the control levers from outside the machine. Operate the control levers only when you are correctly seated.

**Passengers**

Passengers in or on the machine can cause accidents. Do not carry passengers or lift persons.

**Fires**

If your machine is equipped with a fire extinguisher, make sure it is checked regularly. Keep it in the correct machine location until you need to use it.

Do not use water to put out a machine fire, you could spread an oil fire or get a shock from an electrical fire. Use carbon dioxide, dry chemical or foam extinguishers. Contact your nearest fire department as quickly as possible.

**Roll Over Protection**

If the machine starts to roll over, you can be crushed if you try to leave the cab. If the machine starts to roll over, do not try and jump from the cab. Stay in the cab, with your seat belt fastened.

**Confined Areas**

Pay extra attention to proximity hazards when operating in confined areas. Proximity hazards include buildings, traffic and bystanders.

**Safe Working Loads**

Overloading the machine can damage it and make it unstable. Study the specifications in the Operator's Manual before using the machine.

**Lightning**

If you are inside the machine during a lightning storm stay in the machine, switch off the ignition and do not attempt continued use until the storm has passed. If you are outside of the machine during a lightning storm stay away from the machine until the storm has passed. Do not attempt to mount or enter the machine.

If the machine is struck by lightning do not attempt continued use of the machine until it has been checked for damage and malfunction by trained personnel.

**Non-ionising Radiation**

This machine is installed with devices that emit non-ionising radiation which can cause harm to persons, in particular persons with active or non-active implantable medical devices.

## Worksite Safety

⚠ **WARNING** You or others can be killed or seriously injured if you do unfamiliar operations without first practising them. Practise away from the worksite on a clear area. Keep other people away. Do not perform new operations until you are sure you can do them safely.

**WARNING** There could be dangerous materials such as asbestos, poisonous chemicals or other harmful substances buried on the site. If you uncover any containers or you see any signs of toxic waste, stop the machine and advise the site manager immediately.

**WARNING** Before you start using the machine, check with your local gas company if there are any buried gas pipes on the site.

If there are buried gas pipes we recommend that you ask the gas company for any specific advice regarding the way you must work on the site.

Some modern gas pipes cannot be detected by metal detectors, so it is essential that an accurate map of buried gas pipes is obtained before any excavation work commences.

Hand dig trial holes to obtain precise pipe locations. Any cast iron pipes found must be assumed to be gas pipes until contrary evidence is obtained.

Older gas pipes can be damaged by heavy vehicles driving over the ground above them.

Leaking gas is highly explosive.

If a gas leak is suspected, contact the local gas company immediately and warn all personnel on the site. Ban smoking, make sure that all naked lights are extinguished and switch off any engines which may be running.

You are strongly advised to make sure that the safety arrangements on site comply with the local laws and regulations concerning work near buried gas pipes.

**CAUTION** Before you start using the machine, check with your local public water supplier if there are buried pipes and drains on the site. If there are, obtain a map of their locations and follow the advice given by the water supplier.

You are strongly advised to make sure that the safety arrangements on site comply with the local laws and regulations concerning work near buried pipes and drains.

**CAUTION** If you cut through a fibre optic cable, Do not look into the end of it, your eyes could be permanently damaged.

An applicable worksite organisation is required in order to minimise hazards that are caused by restricted visibility. The worksite organisation is a collection of rules and procedures that coordinates the machines and people that work together in the same area. Examples of worksite organisation include:

- Restricted areas
- Controlled patterns of machine movement
- A system of communication.

You and/or your company could be legally liable for any damage you may cause to public utilities. It is your responsibility to make sure that you know the locations of any public utility cables or pipes on the worksite which could be damaged by your machine.

## Risk Assessment

It is the responsibility of the competent people that plan the work and operate the machine to make a judgement about the safe use of the machine, they must take into account the specific application and conditions of use at the time.

It is essential that a risk assessment of the work to be done is completed and that the operator obeys any safety precautions that the assessment identifies.

If you are unsure of the suitability of the machine for a specific task, contact your JCB dealer who will be pleased to advise you.

The following considerations are intended as suggestions of some of the factors to be taken into account when a risk assessment is made. Other factors may need to be considered.

A good risk assessment depends on the training and experience of the operator. Do not put your life or the lives of others at risk.

### Personnel

- Are all persons who will take part in the operation sufficiently trained, experienced and competent? Are they fit and sufficiently rested? A sick or tired operator is a dangerous operator.
- Is supervision needed? Is the supervisor sufficiently trained and experienced?
- As well as the machine operator, are any assistants or lookouts needed?

### The Machine

- Is it in good working order?
- Have any reported defects been corrected?
- Have the daily checks been carried out?
- Are the tyres still at the correct pressure and in good condition and is there sufficient fuel to complete the job (if applicable)?

### Working Area

- Is it level?

- Is the ground solid? Will it support the weight of the machine when loaded?
- How rough is the ground? Are there any sharp projections which could cause damage, particularly to the tyres?
- Are there any obstacles or hazards in the area, for example, debris, excavations, manhole covers, power lines?
- Is the space sufficient for safe manoeuvring?
- Are any other machines or persons likely to be in or to enter the area while operations are in progress?

## The Route to be Travelled

- How solid is the ground, will it provide sufficient traction and braking? Soft ground will affect the stability of the machine and this must be taken into account.
- How steep are any slopes, up/down/across? A cross slope is particularly hazardous, is it possible to detour to avoid them?

## Weather

- How windy is it? High wind will adversely affect the stability of a loaded machine.
- Is it raining or is rain likely? The ground that was solid and smooth when dry will become uneven and slippery when wet, and it will not give the same conditions for traction, steering or braking.

# Walk-Around Inspection

## General

⚠ **WARNING** Walking or working under raised attachments can be hazardous. You could be crushed by the attachments or get caught in the linkages. Lower the attachments to the ground before doing these checks. Also make sure that the park brake is engaged before doing these checks.

The following checks must be made each time you return to the machine after leaving it for any period of time. We advise you also to stop the machine occasionally during long work sessions and do the checks again.

All these checks concern the serviceability of the machine. Some concern your safety. Get your service engineer to check and correct any defects.

1. Check for cleanliness.
   1.1. Clean the light lenses and the rear view mirrors (where applicable).
   1.2. Remove dirt and debris, especially from around the linkages, rams, pivot points and radiator.
   1.3. Make sure the rear chassis step and handrails are clean and dry.
   1.4. Clean all of the safety and instructional labels. Replace any label that is missing or cannot be read.
2. Check for damage.
   2.1. Examine the machine generally for damaged and missing parts.
   2.2. Make sure that the attachment is correctly attached and in good condition.
   2.3. Make sure that all of the pivot pins are correctly installed.
   2.4. Check for oil, fuel and coolant leakages below the machine.
3. Make sure that all of the filler caps are installed correctly.
4. Make sure that all of the access panels are closed correctly.
5. If the filler caps and access panels are installed with locks, we recommend that you lock them to prevent theft or tampering.

# Entering and Leaving the Operator Station

## General

⚠ **CAUTION** Entering or leaving the operator station must only be made where steps and handrails are provided, except in an emergency. Always face the machine when entering and leaving. Make sure the steps, handrails and your boot soles are clean and dry. Do not jump from the machine. Do not use the machine controls as handholds, only use the handrails.

Operator can enter and leave the operator station from both side of the machine.

Make sure the machine is stopped and correctly parked before entering or leaving the operator platform.
Refer to: Stopping and Parking (Page 43).

When entering and leaving the operator platform always maintain a three point contact with the handrails and step. Do not use the machine controls or steering wheel as handholds.

### Entering the Canopy

1. Hold the two handrails, then use the steps to climb on to the operator platform and swing yourself into the operator's seat.

**Figure 17.**

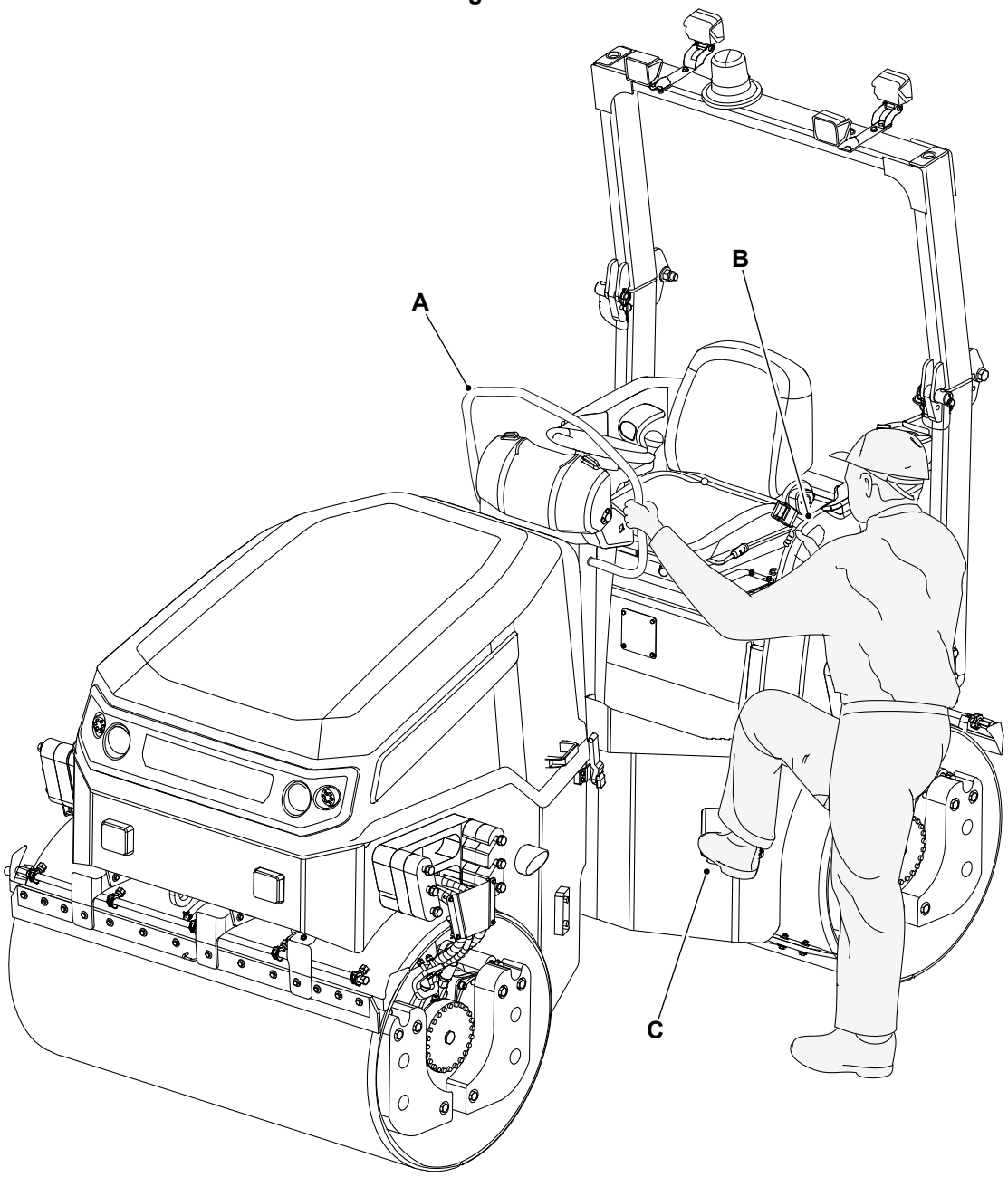


**A** Handrails
**B** Hand grip
**C** Step

## Leaving the Canopy

1. Park the machine on solid, level ground.
2. Stop the engine.
3. Turn the ignition key to the off position.
4. Hold both of the handrails and use the steps to climb down backwards from the operator platform onto the ground.

# Battery Isolator

## General

⚠ **Notice:** Before carrying out arc welding on the machine, disconnect the battery and alternator to protect the circuits and components. The battery must still be disconnected even if a battery isolator is installed.

**Notice:** Do not isolate the machine electrics when the engine is running, this may cause damage to the machine electrics.

### Disconnect the Machine Electrics:

1. Turn the ignition key to the off position.
2. Get access to the battery isolator.
   Refer to: Service Points (Page 100).
3. Turn the battery isolator key in a counter-clockwise direction and remove.

### Connect the Machine Electrics:

1. Make sure the ignition is switched off.
2. Insert the battery isolator key and turn in a clockwise direction.

# Before Starting the Engine

## General

⚠ **WARNING** When a seat belt is checked for condition if it is damaged, if the fabric is worn, or if the machine has been in an accident, replace it with a complete seat belt assembly.

**WARNING** Operating the machine without a seat belt can be dangerous. Before starting the engine, make sure your seat belt is fastened. Check the tightness and condition of the seat belt securing bolts regularly.

**CAUTION** Keep the machine controls clean and dry. Your hands and feet could slide off slippery controls. If that happens you could lose control of the machine.

Obey the correct operating procedures when using the machine in very cold or very hot climates.

If the fuel tank has been empty or if any part of the fuel system has been drained or disconnected, the fuel system must be primed before attempting to start the engine.

1. For your own safety (and others) and for a maximum service life of your machine, do a pre-start inspection before starting the engine.
   - 1.1. If you haven't already done it, do a walk round inspection of the outside of the machine. Also, complete the daily checks as detailed in the service schedules.
   - 1.2. Remove dirt and rubbish from the machine interior, especially around control levers.
   - 1.3. Remove oil, grease and mud from the drive lever and the steering wheel.
   - 1.4. Make sure that your hands and shoes are clean and dry.
   - 1.5. Remove or secure all loose articles on the machine- such as lunch boxes, tools etc.
   - 1.6. Inspect the ROPS (Roll-Over Protective Structure) structure for damage. Get your JCB distributor to repair any damage. Make sure all the securing bolts are fitted and correctly tightened. Make sure the fold down ROPS frame locking pins are fitted and secure.
   - 1.7. Check around the machine for loose or missing bolts, screws etc. Replace or tighten where necessary.
   - 1.8. Inspect the seat belt and its mountings for damage and excessive wear.
   - 1.9. Check the following are in working order. Work lights, warning lights, horn, indicator lights, all switches, direction indicators (if installed).
   - 1.10. Adjust the seat so that you can comfortably reach all the driving controls with your back against the seat back.
   - 1.11. Fasten the seat belt.

# Operator Seat

## General

⚠ **CAUTION** Position the seat so that you can comfortably reach the machine controls. Do not adjust the seat while the machine is moving. You could have an accident if you operate the machine with the seat in the wrong position.

The operator's seat can be adjusted for your comfort. A correctly adjusted seat will decrease the operator fatigue.

Adjust the seat so that you can comfortably reach the machine controls.

For driving the machine, adjust the seat so that you can push the pedals fully down when your back is against the seat back.

Stop using the machine if the operators seat becomes defective. Repair or replace the seat before using the machine again.

## Basic Seat

⚠ **CAUTION** Position the seat so that you can comfortably reach the machine controls. Do not adjust the seat while the machine is moving. You could have an accident if you operate the machine with the seat in the wrong position.

The seat is installed with an operator presence switch. The machine can be started without the operator being seated if the drive lever is in the park position. During machine operation (when drive lever is not in the park position), the operator must be seated with the seatbelt fastened, otherwise the operator presence tell tale will illuminate on the dashboard and the engine will shut off within 2 seconds.

The operator's seat can be adjusted for your comfort. A correctly adjusted seat will reduce operator fatigue. Position the seat so that you can comfortably reach the machine controls.

### Weight Adjustment Lever

Adjust the weight adjustment lever to the respective driver's weight as follows:

1. Pull the lever forward.
2. Pull the lever upward.
3. Move the lever left or right as required to adjust the weight.

**Figure 18.**

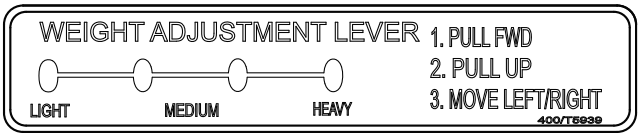


### Back Rest Adjustment Control Knob

Turn the knob clockwise or counter-clockwise to adjust the backrest into desired position.

### Fore and Aft Adjustment Lever

Raise the lever and slide the seat forward and backwards. Release the lever and make sure the seat lock in new position.

### Seat Cushion Tilt Control

Move the lever upwards or downward to adjust the seat cushion tilt angle.

**Figure 19.**

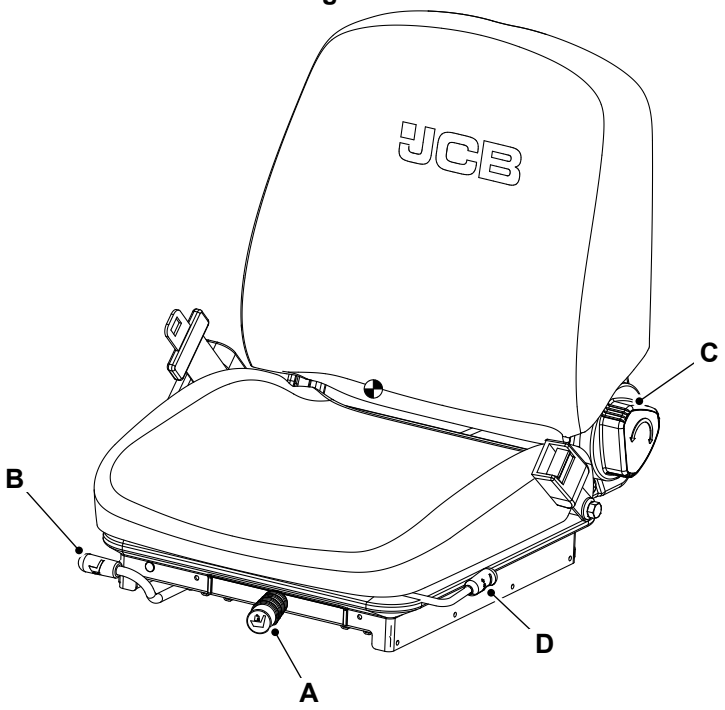


**A** Weight adjustment lever
**B** Fore and aft adjustment lever
**C** Back rest adjustment control knob
**D** Seat cushion tilt control

# Seat Belt

## General

⚠ **WARNING** Operating the machine without a seat belt can be dangerous. Before starting the engine, make sure your seat belt is fastened. Check the tightness and condition of the seat belt securing bolts regularly.

**WARNING** When a seat belt is checked for condition if it is damaged, if the fabric is worn, or if the machine has been in an accident, replace it with a complete seat belt assembly.

**WARNING** The seat belt life can be reduced by many factors such as severe working conditions, high usage, humidity, dust, chemicals and atmospheric conditions. Where the seat belt is exposed to any of these conditions it should be inspected more frequently than that specified in the maintenance schedules.

## Inertia Reel Seat Belt

### Fasten the Seat Belt

⚠ **WARNING** If you do not wear your seat belt you could be thrown about inside the machine, or thrown out of the machine and crushed. You must wear a seat belt when using the machine. Fasten the seat belt before starting the machine.

1. Sit correctly in the seat.
2. Pull the seat belt and the tongue from the inertia reel holder in one continuous movement.
3. Push the tongue into the latch. Make sure the seat belt worn is snug and properly located on the body. Make sure the seat belt is not twisted and that it is over your hips not your stomach.

   3.1. If the seat belt 'locks' before the tongue is engaged, let the seat belt retract into the inertia reel holder then try again. The inertia mechanism can lock if you pull the seat belt too quickly or if the machine is parked on a slope.

**Figure 20.**

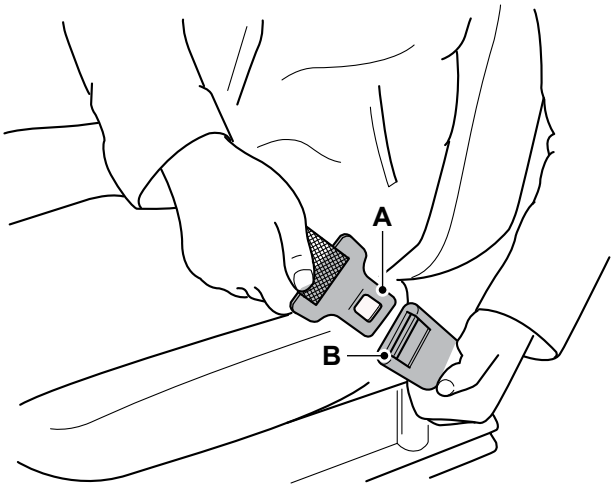


**A** Tongue **B** Latch

***WARNING!*** *If the seat belt does not 'lock' when you check if the seat belt is operating correctly, do not drive the machine. Get the seat belt repaired or replaced immediately.*

4. To make sure the seat belt operates correctly, hold the middle of the seat belt and pull quickly. The seat belt should 'lock'. Refer to Figure 21.

**Figure 21.**

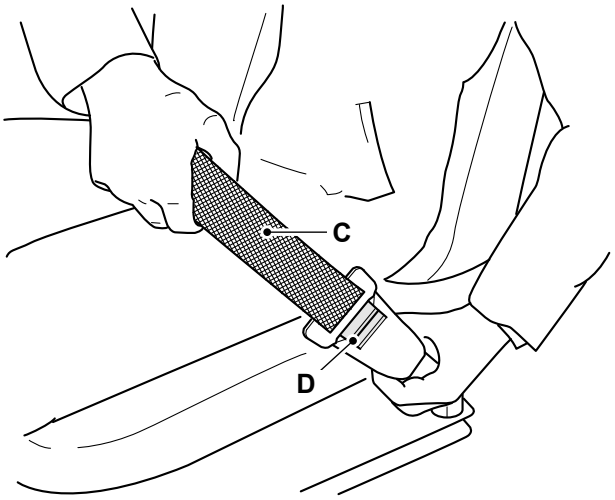


**C** Seat belt

**D** Button

## Release the Seat Belt

⚠ **WARNING** Release the seat belt only after safely stopping the machine, switching off the engine and engaging the park brake (if applicable).

1. Push the button and pull the tongue from the latch.
2. Carefully let the seat belt retract into the inertia reel holder.

# Starting the Engine

## General

⚠ **Notice:** Do not use ether or other starting fluids to assist cold starting. Using these fluids may result in an explosion causing possible injury and/or damage to the engine.

The engine noise and or tone may be louder than usual when cold. The engine will become quieter when the engine reaches normal operating temperature.

New engines do not require a running-in period. The engine/machine should be used in a normal work cycle immediately, glazing of the piston cylinder bores resulting in excessive oil consumption, could occur if the engine is gently run-in. Under no circumstances should the engine be allowed to idle for extended periods.

If any warning lights fail to go off or come on while the engine is running, stop the engine as soon as it is safe to do so.

### Safety Features

The machine is fitted with an operator seat occupancy switch and lever position switch designed to prevent inadvertent activations of the controls. If either of the features malfunction stop using the machine immediately and contact your JCB dealer. This safety feature must be checked every time before operating the machine.

#### Operator Seat Occupancy Switch

This feature prevents the machine from starting if it detects that the operator is not seated and drive lever is not in the park brake position. This feature will also stop the engine from running and bring the machine to a safe standstill after 2s when it detects that the operator seat is vacant and drive lever is not in park brake position.

With the ignition on the seat switch LED (Light Emitting Diode) on the instrument panel must illuminate when the seat is vacant and extinguish when it is occupied.
Refer to: Instruments (Page 48).

#### Drive Lever Position Switch

This feature prevents the machine from starting if it detects that the drive lever is not in the park brake position (furthest position away from the operator).
Refer to: Operating Levers/Pedals (Page 60).

With the ignition on the park brake light on the display illuminates when the lever is in park brake position and extinguishes when it is moved to the neutral position.
Refer to: Instruments (Page 48).

### Start the Engine

1. Make sure that the machine is ready to start.
   Refer to: Before Starting the Engine (Page 35).
2. Make sure that the articulation lock is in the drive position.
   Refer to: Articulation Lock (Page 45).
3. Make sure there are no blocks under the machine.
4. Make sure that the drive lever is in the park position.
5. Make sure that the Engine and Vibration mode switch is in the "MIN" position (Low idle RPM).
6. Make sure that the vibration switch is in the off position.
7. Insert the key into the ignition switch and turn it on.
8. Make sure that the following indicator lights on the instrument panel operate correctly: charging current indicator light, engine oil pressure warning light, park brake light and neutral position lights, rectify them if they do not illuminate.

9. Turn the ignition switch to the preheat position and allow the glow lamp to illuminate, then extinguish.
10. Turn the key to start position and the engine should start. Release the key immediately when the engine starts.
11. When the engine has started, check the all warning lights (excluding the neutral and park brake warning lights) have gone off.
12. Warm the engine at medium speed without load.
13. If the engine does not catch or start at 10 seconds after the starter switch is set at start position, wait for another 30 seconds and then begin the engine starting sequence again.

**Figure 22. Standard Switch**

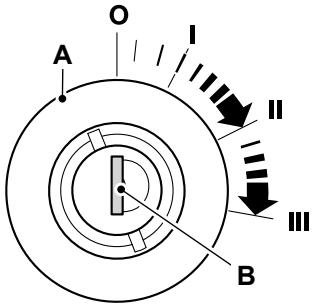


**A** Ignition switch **B** Ignition key

13.1. Do not allow the starter motor to run continuously for more than 20 seconds.

**Table 5. Switch Positions**

| Position | Function |
|---|---|
| 0 | Off/Stop the Engine: Turn the ignition key to this position to stop the engine. Make sure the controls are in neutral before you stop the engine. |
| I | On: Turn the ignition key to this position to connect the battery to all of the electrical circuits. The ignition key will return to this position when it is released from position II or position III. |
| II | Not used. |
| III | Preheat position. Turn the ignition key to this position to operate the glow plug or grid heater for the appropriate time. |
| IV | Start position: Turn the ignition key to this position to operate the starter motor and turn the engine. The ignition switch has an inhibitor to stop the ignition switch being turned on when the engine is running. |

## Cold Weather Start

1. The table shows the standard preheat position times for various temperatures. This operation is not required, when the engine is warmed up. Refer to Table 6.

   1.1. Make sure to warm up the engine, not only in winter, but also in warmer seasons. An insufficiently warmed-up engine can decrease its service life.

   1.2. When the temperature drops below the figure specified detach the battery from the machine and keep it inside in a safe area.

   Temperature: -15°C (5.0°F)

2. Warm up the machine for the specified duration as mentioned below.

   2.1. Start the engine and keep it at low idle for 3min.

2.2. Select engine mode to ECO and maintain it for 3 min.

2.3. Select engine mode to MAX and maintain it for another 3 min.

2.4. The machine is now ready for operations.

**Table 6.**

| **Ambient temperature** | **Preheat Position Time** | |
|---|---|---|
| | **With Glow Lamp Timer** | **Extended Time** |
| Above 10°C (50.0°F) | When the ignition switch key is turned to the preheat position glow lamp goes off after about 6 seconds. If necessary keep the ignition key at the preheat position for the extended time. | Not required |
| 10°C (50.0°F) to -5°C (23.0°F) | | Approximately 5 seconds |
| Below -5°C (23.0°F) | | Approximately 10 seconds |

# Stopping and Parking

## General

⚠ **WARNING** Do not dismount a moving machine.

**WARNING** If the machine must temporarily be parked on a gradient, park the machine with the front pointing uphill. Ensure that the machine is blocked by a fixed object.

**WARNING** An incorrectly parked machine can move without an operator. Follow the instructions in the Operator's Manual to park the machine correctly.

**CAUTION** Entering or leaving the operator station must only be made where steps and handrails are provided, except in an emergency. Always face the machine when entering and leaving. Make sure the steps, handrails and your boot soles are clean and dry. Do not jump from the machine. Do not use the machine controls as handholds, only use the handrails.

**Notice:** The efficiency of the rams will be affected if they are not kept free of solidified dirt. Clean dirt from around the rams regularly. When leaving or parking the machine, close all rams if possible to reduce the risk of weather corrosion.

**Notice:** Do not suddenly stop the engine when it is running under a operating load. Instead allow it to idle for a short period with no load so that the internal temperature falls slowly and coolant loss through boiling is avoided.

1. Turn the vibration switch to the off position.
2. Stop the machine on solid, level ground where the machine will not be a hazard or danger.
3. Move the drive lever to the park brake position.
4. Make sure that the park brake indicator lights up.
5. Set the Engine and Vibration mode switch to the "MIN" position (Low idle RPM).
6. Turn the ignition key to off position.
7. Leave and secure the machine:
   - 7.1. If you are leaving the machine for a long period, make sure all switches are set to off. If necessary, leave the hazard warning and/or side lights switched on.
   - 7.2. Use the handholds and step when you climb down from the machine.
   - 7.3. If available operate the battery cut off switch.
   - 7.4. Make sure that the fuel filler cap is locked (if a lock is installed).
   - 7.5. Lock the bonnet before leaving the machine.
8. Safeguard the machine against moving unintentionally by means of blocks.

**Figure 23.**

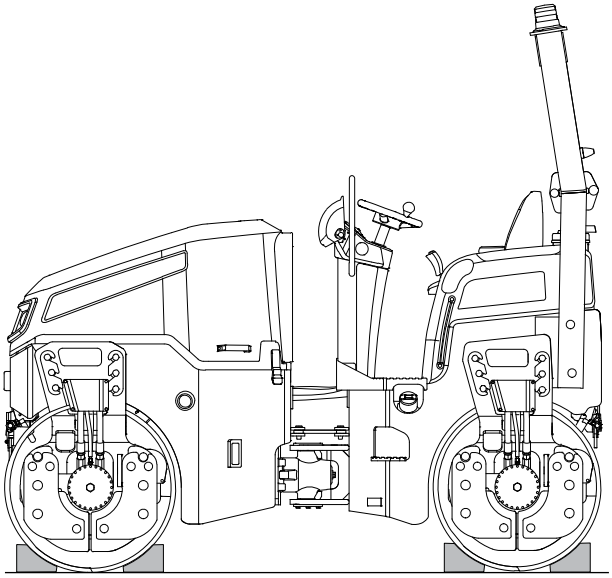

If the machine is to be shutdown for long period, it must be prepared for long storage.

## Brake Operational Limits

The machine park brakes can hold the machine at gradients up to 20%.

## Emergency Stop of the Engine

Press the emergency stop switch on the steering column and the engine will be stopped.
Refer to: Component Locations (Page 19).

Pull the switch up to release the switch. Turning the ignition off and on will not cancel the emergency stop.

# Safety Equipment

## Articulation Lock

⚠ **WARNING** Make sure the articulation lock is in the transport position before you transport the machine. The articulation lock must also be in the transport position if you are carrying out daily checks or doing any maintenance work in the articulation danger zone. If the articulation lock is not in the transport position you could be crushed between the two parts of the chassis.

### Drive Position

Always make sure the articulation lock has been removed before you try to drive the machine. The machine cannot be steered with the articulation lock in the transport position.

1. Remove the locking pin and clip.
2. Move the articulation lock plate to its drive position.
3. Put the locking pin and clips in position to secure the articulation lock in the drive position.

**Figure 24.**

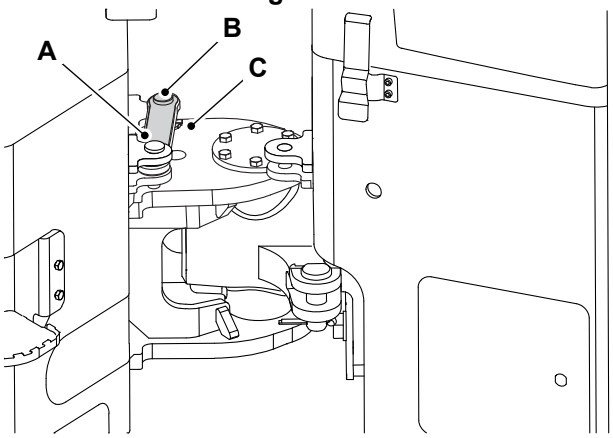


**A** Articulation lock- drive position
**B** Locking pin
**C** Clip

### Transport Position

The articulation lock is attached to the side of the machine. The articulation lock is installed with the machine in the 'straight ahead' position.

1. Steer the machine to put the front and rear drums in a straight line.
2. Park the machine on solid, level ground.
   Refer to: Stopping and Parking (Page 43).
3. Engage the park brake, put the transmission in neutral and stop the engine.
4. Remove the pin and clip to release the articulation lock from its drive position.
5. Move the articulation lock to the transport position and retain by replacing locking pin and clip. Refer to Figure 25.
6. Make sure that locking pin is locate through the holes in the articulation lock and the roller frame.

**Figure 25.**

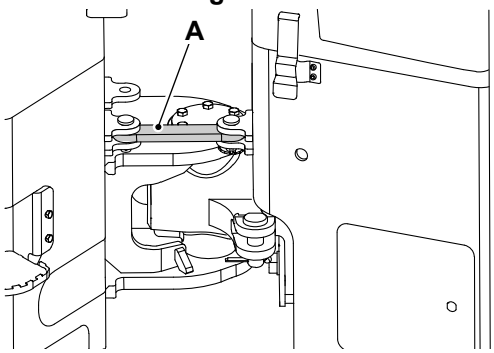


**A** Articulation lock- Transport position

## Centre Joint Adjustment (If Required)

1. Make the machine safe.
2. Remove the spilt pin from the cylinder pin. Refer to Figure 26.
3. Remove the articulation cylinder pin.
4. Disconnect the articulation cylinder from the front chassis.
5. Loosen the centre joint front plate bolts from both side of the machine.
6. Adjust the centre joint front plate as required.
7. Tighten the centre joint front plate bolts.
8. Connect the articulation cylinder to the centre joint front plate.
9. Install the cylinder pin.
10. Install the spilt pin and make sure that it is locked correctly. Refer to Figure 26.

**Figure 26.**

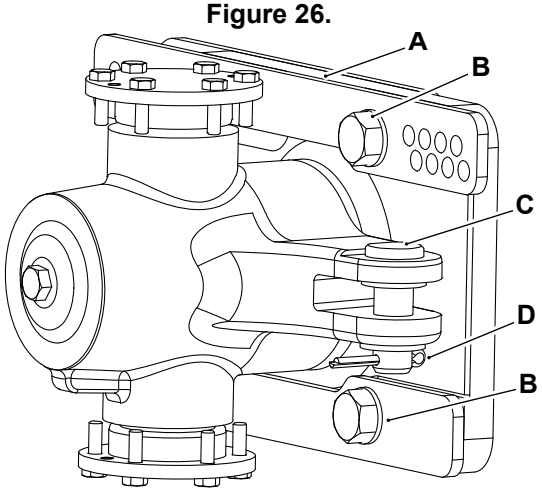


**A** Centre joint front plate
**B** Bolts
**C** Cylinder pin
**D** Spilt pin

# Drive Controls

## Steering Wheel

Turn the steering wheel in the direction you want to go.
Refer to: Component Locations (Page 19).

The steering wheel incorporates an assister knob for single handed operation.

# Instruments

## Instrument Panel

For: CT380 [STV PUN], CT430 [STV PUN] ..... Page 48
For: CT380 [T4F PUN], CT430 [T4F PUN] ..... Page 50

(For: CT380 [STV PUN], CT430 [STV PUN])

The instruments and warning lights are grouped together on an instrument panel.

When a warning light comes on an alarm will sound (depending on severity of the condition). The only way to cancel the alarm is to set the ignition switch to position '0'. The problem can then be rectified.

Do not use the machine if it has a fault condition, or you may damage the engine and/or the transmission.

**Figure 27.**

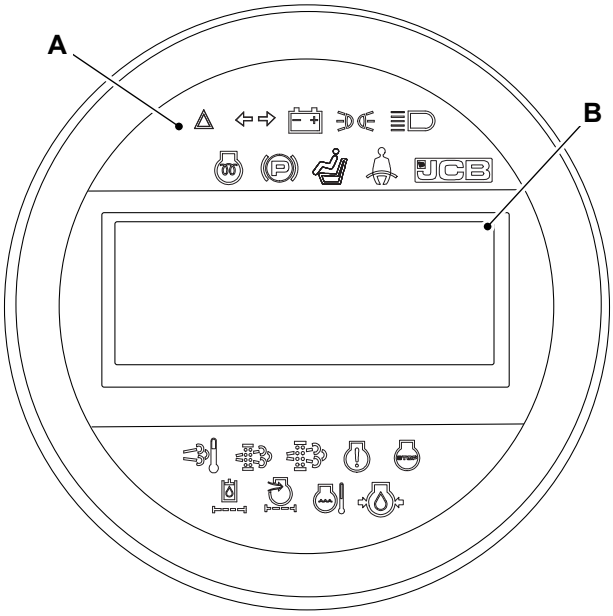


**A** Warning and notification symbols **B** LCD

### Warning and notification symbols

**Table 7. Warning and notification symbols**

| | | |
|---|---|---|
| 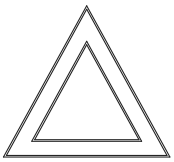 | Hazard warning indicator (Red) | Visual only. Flashes with the hazard warning lights. Turn the flashers on when your machine is a possible hazard. |
| 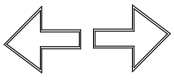 | Direction indicator (Green) | Visual only. Illuminate with the direction indicators. Use the direction indicators to signal before you turn the machine. |
| 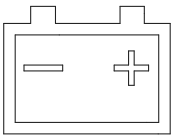 | Battery charging condition (Red) | Audible/Visual. The lamp illuminates and buzzer will sound, if battery is not charging while engine is running. If battery is charging, the lamp and buzzer should go off a few seconds after the engine is started. |

| | | |
|---|---|---|
| 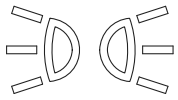 | Sidelights (Green) | Visual only. Illuminates when sidelights are switched on (part of road light option, integrated to dip beams). |
| 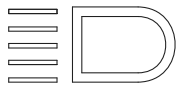 | Main Beam (Blue) | Visual only. Lights up when the headlight main beams are switched on. Turn the main beams off for on-coming traffic. |
|  | Engine pre heat (Amber) | Visual only. Illuminate when engine pre heat is on. |
|  | Park brake on (Red) | Visual only. Illuminates when the park brake is engaged. |
|  | Seat switch (Amber) | Visual only. Illuminate when operator is not sat on the operator seat. |
| 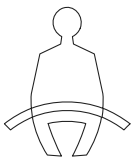 | Seat belt switch (Amber) | Audible/Visual. Illuminates when seated operator does not wear the seat belt whilst the drive lever is out of neutral position. The buzzer turns on along with the tell tale and turns off either after the seat belt is fastened or after 15s. |
| 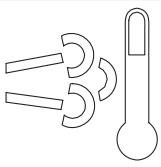 | HEST (High Exhaust System Temperature) (Amber) | Visual only. Illuminates during DPF regeneration Engine Emissions System Filter. |
| 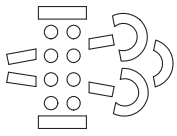 | DPF (Diesel Particulate Filter) Regeneration Warning (Amber) | Visual only. Illuminates when DPF manual regeneration is required, Flashes when DPF manual regeneration is in progress Engine Emissions System Filter. |
| 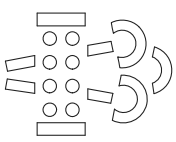 | DPF Regeneration Warning (Red) | Visual only. Illuminates when DPF service regeneration is required. Flashes when DPF service regeneration is in progress. |
| 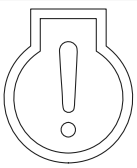 | Engine Warning (Amber) | Visual only. Illuminates when DPF manual regeneration is required. |

| | | |
|---|---|---|
|  | Engine Stop (Red) | Visual only. Illuminates when DPF service regeneration is required. |
| 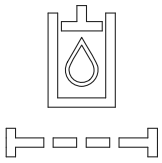 | Hydraulic oil filter (Amber) | Visual only. Illuminate when hydraulic oil filter is blocked. |
| 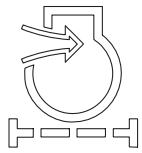 | Engine air filter blocked (Amber) | Audible/Visual. Illuminate engine air filter is blocked. |
| 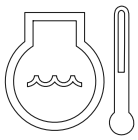 | High coolant temperature (Red) | Audible/Visual. The light will illuminate when the engine coolant temperature is too high. Stop the machine immediately and remedy the fault. |
| 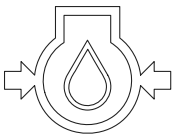 | Engine low oil pressure (Red) | Audible/Visual. Illuminates if the engine oil pressure drops too far. Illuminates when the ignition switch is set to position 'I' before starting the engine but should extinguish when the engine starts, if this light remains 'on' stop the engine immediately. |

(For: CT380 [T4F PUN], CT430 [T4F PUN])

The instruments and warning lights are grouped together on an instrument panel.

When a warning light comes on an alarm will sound (depending on severity of the condition). The only way to cancel the alarm is to set the ignition switch to position '0'. The problem can then be rectified.

Do not use the machine if it has a fault condition, or you may damage the engine and/or the transmission.

**Figure 28.**

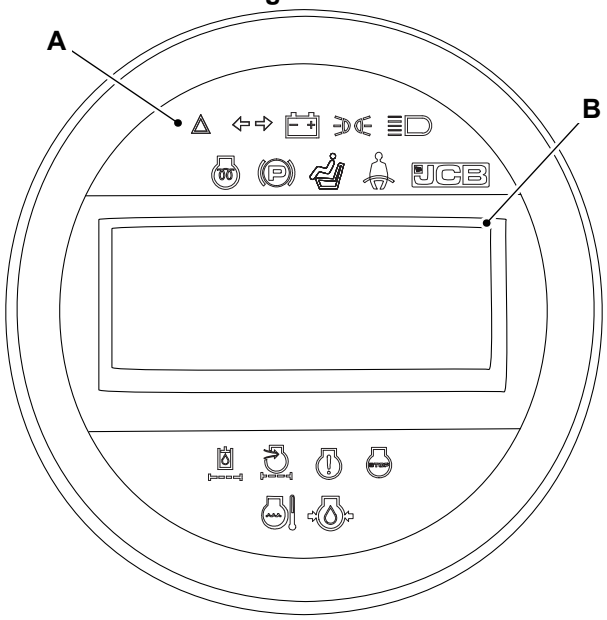


**A** Warning and notification symbols **B** LCD

## Warning and notification symbols

**Table 8. Warning and notification symbols**

| | | |
|---|---|---|
| 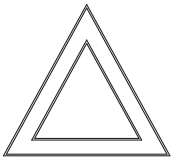 | Hazard warning indicator (Red) | Visual only. Flashes with the hazard warning lights. Turn the flashers on when your machine is a possible hazard. |
| 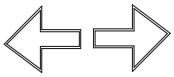 | Direction indicator (Green) | Visual only. Illuminate with the direction indicators. Use the direction indicators to signal before you turn the machine. |
| 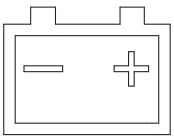 | Battery charging condition (Red) | Audible/Visual. The lamp illuminates and buzzer will sound, if battery is not charging while engine is running. If battery is charging, the lamp and buzzer should go off a few seconds after the engine is started. |
| 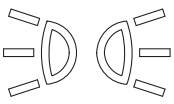 | Sidelights (Green) | Visual only. Illuminates when sidelights are switched on (part of road light option, integrated to dip beams). |
| 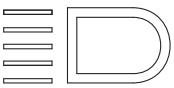 | Main Beam (Blue) | Visual only. Lights up when the headlight main beams are switched on. Turn the main beams off for on-coming traffic. |

| | | |
|---|---|---|
| 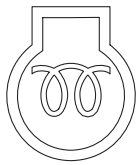 | Engine pre heat (Amber) | Visual only. Illuminate when engine pre heat is on. |
|  | Park brake on (Red) | Visual only. Illuminates when the park brake is engaged. |
|  | Seat switch (Amber) | Visual only. Illuminate when operator is not sat on the operator seat. |
| 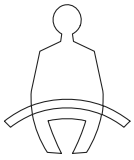 | Seat belt switch (Amber) | Audible/Visual. Illuminates when seated operator does not wear the seat belt whilst the drive lever is out of neutral position. The buzzer turns on along with the tell tale and turns off either after the seat belt is fastened or after 15s. |
| 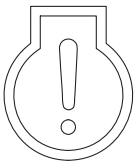 | Engine Warning (Amber) | Visual only. Illuminates when DPF manual regeneration is required. |
|  | Engine Stop (Red) | Visual only. Illuminates when DPF service regeneration is required. |
| 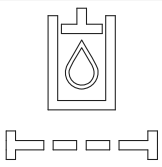 | Hydraulic oil filter (Amber) | Visual only. Illuminate when hydraulic oil filter is blocked. |
|  | Engine air filter blocked (Amber) | Audible/Visual. Illuminate engine air filter is blocked. |
| 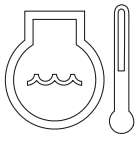 | High coolant temperature (Red) | Audible/Visual. The light will illuminate when the engine coolant temperature is too high. Stop the machine immediately and remedy the fault. |
| 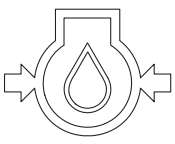 | Engine low oil pressure (Red) | Audible/Visual. Illuminates if the engine oil pressure drops too far. Illuminates when the ignition switch is set to position 'I' before starting the engine but should extinguish when the engine starts, if this light remains 'on' stop the engine immediately. |

# Emissions Control System

(For: CT380 [STV PUN], CT430 [STV PUN])

## DPF Regeneration

DPF (Diesel Particulate Filter) regeneration is the process of cleaning and emptying a DPF clogged filter. The soot collected in the filter is burnt to make sure that the filter does not block and it can trap more soot.

DPF must be heated to a very high temperature in order to burn the soot particles by following ways:

- Passive regeneration - Occurs automatically. Operator interaction is not required and there is no impact on the machine performance. The exhaust temperature is between 250–500°C (481.6–931.3°F).
- Automatic regeneration - Occurs automatically. Operator interaction is not required and there is no impact on the machine performance. The exhaust temperature is above 500–650°C (931.3–1,201.1°F).
- Manual regeneration - Initiated by the operator. The machine cannot be used for normal work whilst the regeneration is taking place. The exhaust temperature is between 500–650°C (931.3–1,201.1°F).
- Service regeneration - Initiated through Servicemaster by a qualified service engineer. The exhaust temperature is between 500–650°C (931.3–1,201.1°F).

### High Exhaust System Temperature (HEST)

During regeneration, the operator may experience changes in engine noise and smell emitted from the machine, which is normal.

If the exhaust temperature reaches a certain limit during a regeneration, then the HEST (High Exhaust System Temperature) lamp will illuminate, this is not a fault. The operator can continue the machine operation but must be aware of the increased exhaust temperature, as the increased temperature can be hazardous in a flammable environment and may cause harm or damage to the nearby objects. Refer to Figure 29.

**Figure 29.**



### Force Regeneration

Force regeneration allows the operator to confirm the start of a manual regeneration. This is indicated by the amber regeneration status lamp illumination. The operator should park machine on a safe place and carry out the manual regeneration.

### Manual Regeneration

Repeated cancelling of an automatic regeneration or the machines duty cycle may lead to the requirement for a manual regeneration. This is indicated by the manual DPF regeneration lamp on the display. The operator should park machine on a safe place and carry out a manual regeneration via the manual regeneration switch and regeneration tell-tale will glow on the machine display. Refer to Figure 30. The process takes approximately 60min.

**Figure 30.**

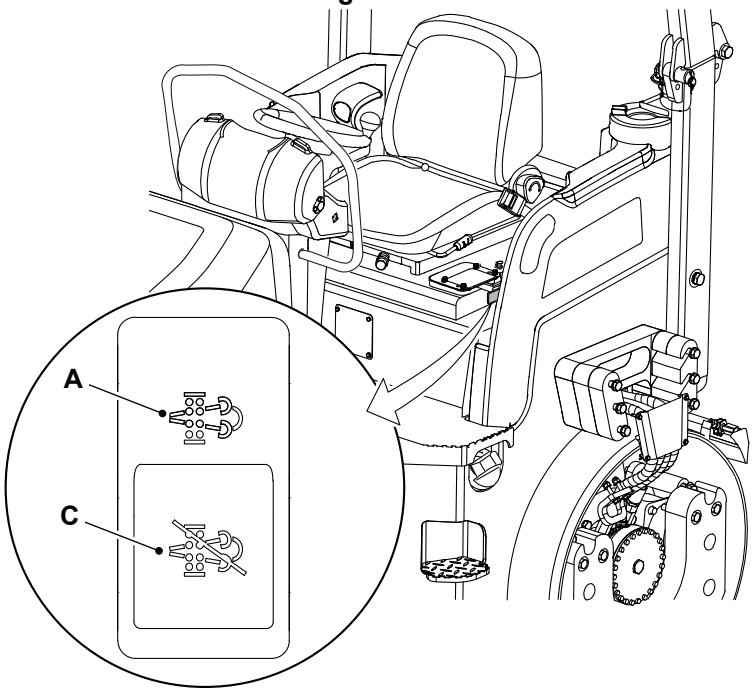


**A** Position-1 Manual regeneration (momentary return)
**B** Position -0 Automatic regeneration (default position)
**C** Position-2 Regeneration Inhibit

## Manual regeneration switch

If the prompts of amber DPF lamp for a manual regeneration are ignored, the engine will derate and operate with limited power and torque. If the operator continues to ignore the request for a manual regeneration, eventually the DPF will clog beyond the permissible limit and it will not be possible to perform a manual regeneration. The red DPF regeneration lamp will illuminate on the display and the operator should stop the machine as soon as it is safe to do so and call a qualified service representative.

## Regeneration Inhibit

Press the switch to Position-2 to inhibit regeneration. Regeneration cancelled/inhibited by the operator. This should only be done if the operator considers the machine to be in a potentially hazardous environment, repeated cancelling/inhibiting will lead to the requirement of a manual regeneration

1. Do the steps that follow to perform the manual regeneration:
   1.1. Park the machine on a firm, level ground.
   1.2. Apply the park brake.
   1.3. Make the machine safe.
   Refer to: Maintenance Positions (Page 99).
   1.4. Make sure that the engine is running.
   1.5. Select Engine and Vibration mode switch to ECO position..
   1.6. Press the manual regeneration switch for the specified duration. Refer to Figure 30.
   Duration: 3s
   1.7. "DPF Regeneration started " message appears on display screen. Refer to Figure 31.

**Figure 31.**

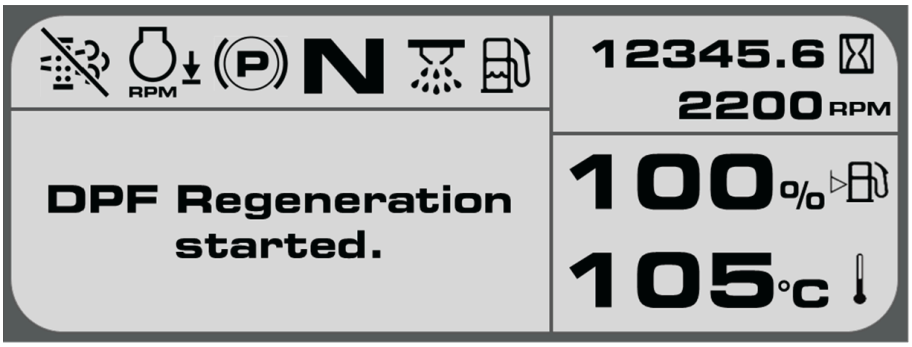


1.8. During manual regeneration, the engine speed will increase and regeneration tell-tale will glow on the machine display. Refer to Figure 32.

**Figure 32.**

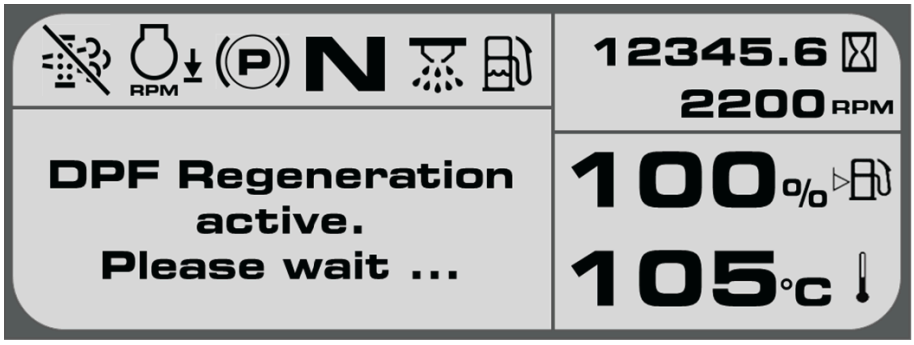


1.9. Wait until the regeneration tell-tale stops flashing and "DPF Regeneration Completed" message appears on display screen, then the engine speed will decrease to 850rpm. Refer to Figure 33.

**Figure 33.**

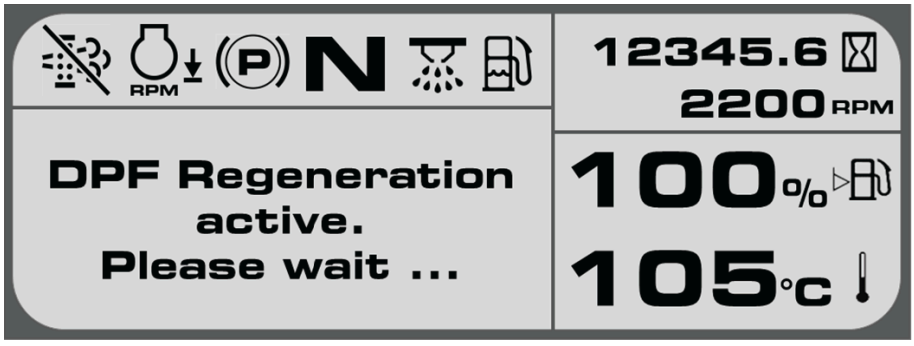


## Automatic Regeneration

If exhaust temperature reaches a certain limit during an automatic regeneration then the HEST lamp may illuminate. The operator needs to be aware of the increased exhaust temperature as it can be hazardous in a flammable environment, and may cause harm/damage to nearby objects and personnel.

During an automatic regeneration, no changes in machine functionality or performance is observed.

During an automatic regeneration, the HEST lamp may illuminate.

Only cancel, if it is not safe to carry out the regeneration. Excessive cancelling will lead to the requirement of a manual regeneration. The cancel option can be used on several consecutive occasions. However, this will

prevent the automatic regeneration from running and risks clogging the DPF. A manual or service regeneration may then be required.

**Table 9. Regeneration Strategy**

| Level | Soot Load (%) | Lamp Strategy | Passive Regeneration | Automatic Regeneration | Manual Regeneration | Service Regeneration | Impact |
|---|---|---|---|---|---|---|---|
| 0 | 0-30 | No Lamp; No Regen required | NIL | NIL | NIL | NIL | |
| 1 | 30-80 | No Lamp; No Regen required | Natural soot burning. Exhaust temperature is between 250–500°C (481.6–931.3°F). | Not available | Not available | Not available | • No impact to the operator.<br>• No impact on the machine performance. |
| 2 | 80-90 | HEST Lamp Active (Flashing)  | Not available | Routine - Soot burning with post fuel injection. Exhaust temperature is between 500–650°C (931.3–1,201.1°F). | Available (not recommended) | Not available | • No impact on the machine performance.<br>• Fuel consumption with limited effect.<br>• Temperature change in noise/soke/smell. |
| 3 | 90-100 | Amber Regen Lamp solid ON, HEST  | Not available | Not available | Available when manual regeneration switch is pressed. | Not available | • No engine derate.<br>• Operator must perform the manual regeneration in the machine park condition.<br>• For manual regeneration, the engine coolant temperature should be more than 60°C (139.9°F).<br>• The average regeneration time is between 45–60min. |

| Level | Soot Load (%) | Lamp Strategy | Passive Regeneration | Automatic Regeneration | Manual Regeneration | Service Regeneration | Impact |
|---|---|---|---|---|---|---|---|
| 4 | 100-110 | Amber Regen Lamp solid ON with HEST, MIL  | Not available | Not available | Urgent - Available when manual regeneration switch is pressed. | Available (not recommended) | • Engine performance - 50% derate (Torque).<br>• Operator must perform the manual regeneration in the machine park condition.<br>• Average regeneration time is between 60–70min. |
| 5 | >110 | Red Regen Lamp solid ON with Stop lamp  | Not available | Not available | Not available | Not available to customer but qualified service engineer can perform through Servicemaster. | • Engine performance - 70% derate (Torque).<br>• Machine cannot perform any operations.<br>• For manual regeneration, the engine coolant temperature should be more than 60°C (139.9°F)<br>• The average regeneration time is between 60–70min.<br>• It is recommended to replace the engine oil filter and engine oil after service regeneration. |

# Getting the Machine Moving

## General

⚠ **DANGER** Only reverse at slow speeds. Look behind while reversing and be aware of bystanders in the vicinity of the machine.

**WARNING** If the engine or steering fails, stop the machine as quickly as possible. Do not operate the machine until the fault has been corrected.

1. Start the engine.

   Refer to: Starting the Engine (Page 40).

2. Check the operator seat is correctly adjusted.

   Refer to: Operator Seat (Page 36).

3. Check the seat belt is correctly fastened.

   Refer to: Seat Belt (Page 38).

4. Set the Engine and Vibration mode switch to the "ECO" position..
5. Disengage the park brake (light goes out) by pulling the drive lever to the left.
6. Use the drive lever to move the machine in the forward or backward direction. The control is proportional (i.e. the further the level is moved from the neutral position, the faster the machine will travel). Do not adjust the machine speed with the engine speed lever.

   6.1. High speed travel can cause accidents. Always travel at a safe speed to suit working conditions.

7. While the machine is travelling slowly, check the steering and brakes. Do not drive the machine unless the steering and brakes are working correctly.
8. Put the drive lever into the neutral position in order to stop the machine.
9. Engage the park brake (light comes on) by pushing the drive lever to the right.

# Slopes

## General

⚠ **WARNING** Make sure that you have been trained and are familiar with the use of machines on slopes, and understand the adverse effects that slopes and site conditions can have on stability. Never use the machine on a slope if you do not understand the recommended practices for the use of machines in such applications.

**WARNING** If the machine starts to roll over, you can be crushed if you try to leave the machine. If the machine starts to roll over, do not try and jump from the machine. Stay in the machine, with your seat belt fastened.

### Definition of Gradeability

The gradeability of a roller is the gradient angle of a firm, hard and level roadway on which a roller of standard specification, with it's longitudinal axis pointing in the incline direction, can start in the forward and reverse directions by means of it's own propulsion and then travel further for a short period.

### Definition of Permissible Gradient

The permissible gradient when the machine is being used as intended is that gradient of a firm, hard and level roadway on which the roller with its longitudinal axis pointing in the incline direction can be accelerated or braked without any danger and can be reliably held at standstill by means of a parking brake which can be actuated from the operator's stand. It may, however, be limited further by the permissible longitudinal inclination. Refer to: General (Page 145).

### Longitudinal Slopes

This slope angle has been measured on a hard flat surface with the machine stationary, the steering in the straight ahead position, with all tanks full and without vibration.

Loose ground, steering of the machine, vibration on, machine speed and changes to the centre of gravity could cause the machine to tip at smaller slope angles than those specified here.

**Figure 34.**

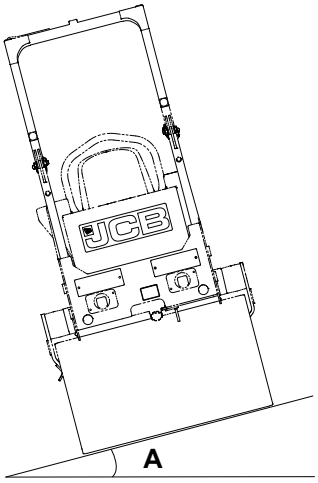


**A** Maximum longitudinal slope angle

**Table 10.**

| Model | Maximum Longitudinal Slope Angle |
|---|---|
| CT380 | 31.2° |
| CT430 | 31.6° |

# Operating Levers/Pedals

## Basic Controls

The drive lever has three positions: forward, neutral/park brake and reverse. Refer to Figure 35.

Use the drive lever for changing the driving direction and speed adjustments.

**Figure 35.**

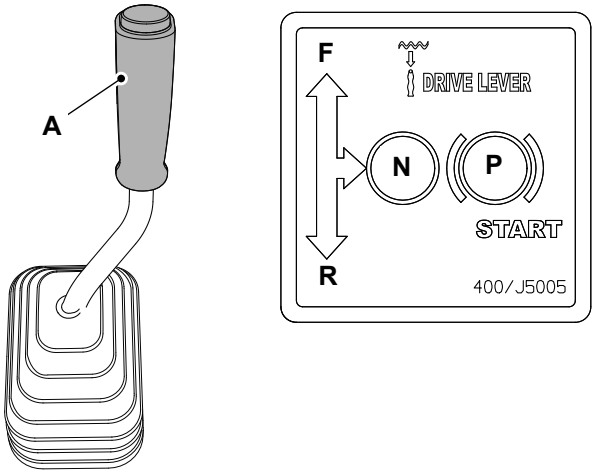


**A** Drive lever
**R** Reverse drive position
**P** Parkbrake position
**F** Forward drive position
**N** Neutral position

The neutral position is in the centre of the lever travel.

To operate the machine, move the drive lever forwards or backwards from the neutral position.

Move the lever forward to drive the machine forward and move the lever backward to reverse. The control is proportional (i.e. the further the lever is moved from the neutral position, the faster the machine will travel.

Move the lever to the neutral position or parkbrake to stop the machine.

When you start or stop the engine, make sure that the drive lever is in the park position and that is has locked in position.

The engine will only start when the drive lever is in the park brake position.

## Both ways Driving lever (Optional)

**Figure 36.**

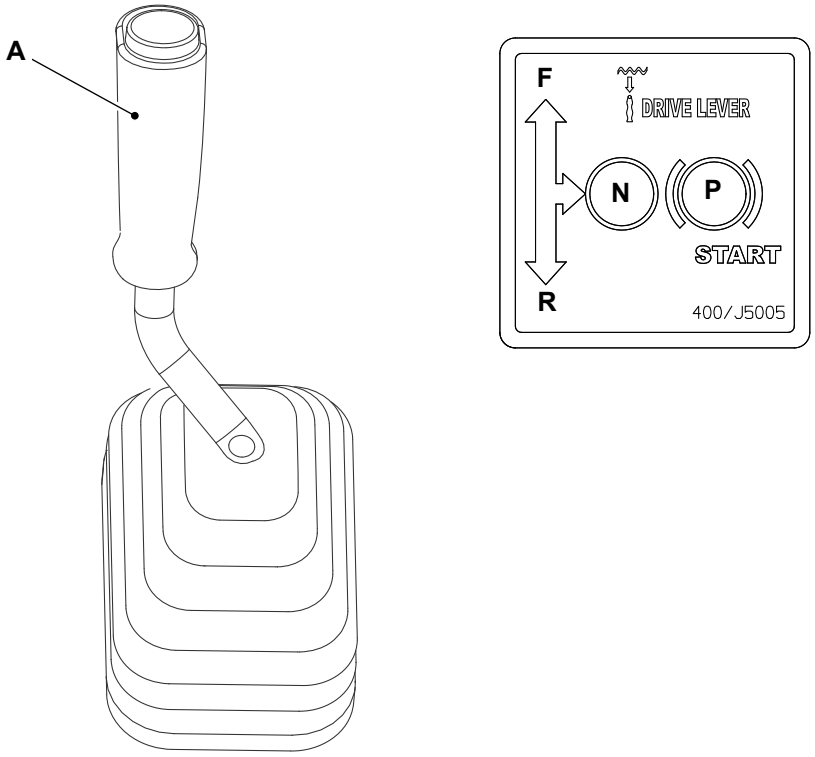


**A** Drive lever
**R** Reverse drive position
**P** Parkbrake position
**F** Forward drive position
**N** Neutral position

# Working with the Drum

## Working without Vibration

⚠ **DANGER** Only reverse at slow speeds. Look behind while reversing and be aware of bystanders in the vicinity of the machine.

**WARNING** Before reversing, make sure the area behind the machine is clear of other persons. If this is not observed, injury or death can result.

Make the first pass for pressing filling material without vibration. Make the last pass for smoothing the filling material without vibration.

Make the first pass for pressing a bituminous layer without vibration. Make the last pass for smoothing the bituminous layer without vibration.

1. Set the Engine mode switch to the "MAX" position.
2. Disengage the park brake (the indicator light should extinguish).
3. Use the drive lever to move the machine in the forward or backward direction. Do not adjust the speed of the machine with the Engine mode switch.
4. Put the drive lever into the neutral position in order to stop the machine.

**Figure 37.**

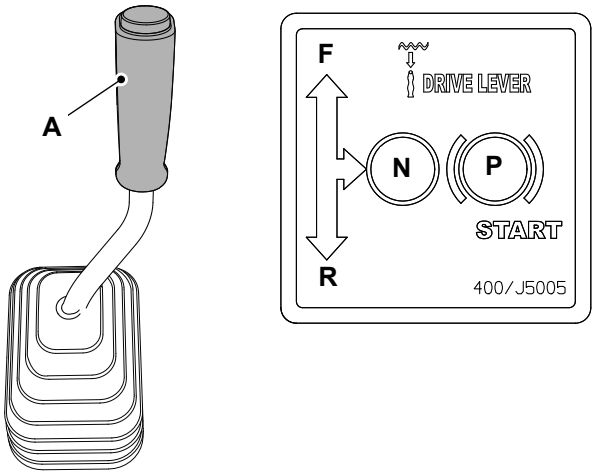


**A** Drive lever
**R** Reverse position
**P** Parkbrake position
**F** Forward position
**N** Neutral position

## Working with Vibration

⚠ **WARNING** The vibrations from this machine can cause trench walls or high hillsides to collapse. If it is necessary to work in the vicinity of a trench or a high hillside,ensure that these are propped up. If this precaution is not taken, people working in the area can be injured or killed.

**WARNING** Before reversing, make sure the area behind the machine is clear of other persons. If this is not observed, injury or death can result.

**Notice:** When the machine is used in the immediate vicinity of a building, it is possible for the vibration to cause the building to vibrate severely and be damaged. It is necessary to check what effects the operation of the machine may have on the building.

**Notice:** Using vibration on hard, compaction-averse surfaces can cause serious damage.

Make the first pass for pressing the filling material without vibration. Make the last pass for smoothing the filling material without vibration.

Make the first pass for pressing a bituminous layer without vibration. Make the last pass for smoothing the bituminous layer without vibration.

1. Set Engine and Vibration mode switch to MAX position. Machine speed can be controlled by Drive lever.
2. Select the required vibration (front drum, rear drum or both).
   Refer to: Console Switches (Page 21).
3. Select the automatic vibration if required.
4. Use the drive lever to move the machine in the forward or backward direction.
5. Put the drive lever into the neutral position in order to stop the machine.
6. Press the vibration switch to turn on vibration. Do not vibrate when the machine is stationary. Only switch the vibration on when the machine is driving. Press the vibration switch again to switch off the vibration before the machine has stopped.
7. Do not make any further vibration passes once the optimum compaction of the filling material has been achieved as this can impair the result of the vibration.
8. Use a recognised method of measurement to test the compaction achieved.

The recommended driving speed with vibration is 3–4km/h (1.9–2.5mph)

**Figure 38.**

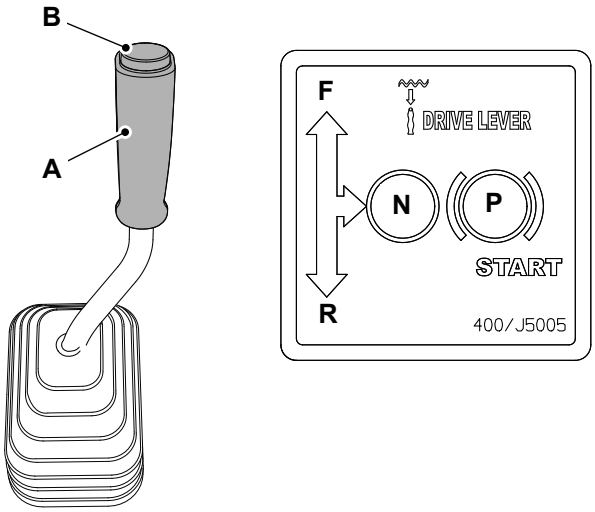


**A** Drive lever
**B** Vibration Switch
**F** Forward direction
**R** Reverse direction
**N** Neutral position
**P** Parkbrake position

# Sprinklers and Scrapers

## Sprinkler Control Switch

The sprinkler control switch can be changed between four positions. Turn the switch to the position as required. Refer to Figure 39.

Figure 39.

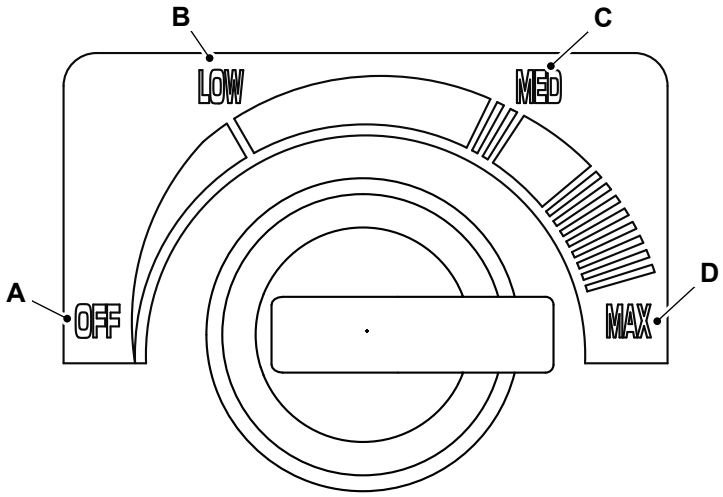


Table 11.

| Item | Switch Position | On Time (sec) | Off Time (sec) |
|---|---|---|---|
| A | Off position | 0% | 100% |
| B | Low position | 17% (2s) | 83% (10s) |
| C | Medium position | 33% (4s) | 67% (8s) |
| D | Maximum position | 100% | 0% |

## Operating the Sprinklers and Scrapers

1. Make sure that ignition switch is turn to on position.
2. Set the sprinkler control switch to the required position. Refer to Figure 39.
3. To stop the sprinklers, set the sprinkler control switch to the off position.
4. When rolling asphalt the scrapers and sprinklers should be used simultaneously.
5. When rolling earth the scrapers and sprinklers should not be used.

# Power Sockets

## Auxiliary Power Socket

Your machine may be installed with one or more 12V auxiliary power sockets, which can be used for mobile phone chargers or other 12V powered devices.
Refer to: Component Locations (Page 19).

Only connect items which are compatible with the power rating of the socket and have the correct plug.

Always operate the engine during the prolonged use of the electrical accessories, or the battery can discharge.

Make sure that the socket cap is closed when the socket is not in use.

# Fire Extinguisher

## General

The fire extinguisher cab be stowed in a bracket on the ROPS (Roll-Over Protective Structure) frame at the back of operator seat. Keep the fire extinguisher in the bracket until you need to use it.
Refer to: Main Component Locations (Page 8).

### Operation

⚠ **WARNING** Do not use the fire extinguisher in a confined space. Make sure that the area is well ventilated during and after using the fire extinguisher.

**WARNING** After any use, the extinguisher must be replaced or serviced.

Make sure that you understand how to use the fire extinguisher. If necessary, refer to the instructions found on the fire extinguisher.

Only try to extinguish a fire if the circumstances permit and your safety is not endangered. If necessary, contact your nearest fire department.

Using the fire extinguisher:

1. Move the machine to a safe area to prevent the fire from spreading.
2. Remove the fire extinguisher from its bracket.
3. Aim directly at the fire from an upwind position, if possible.
4. Squeeze the trigger to operate the fire extinguisher, release the trigger to stop the flow. Refer to Figure 40.

**Figure 40.**

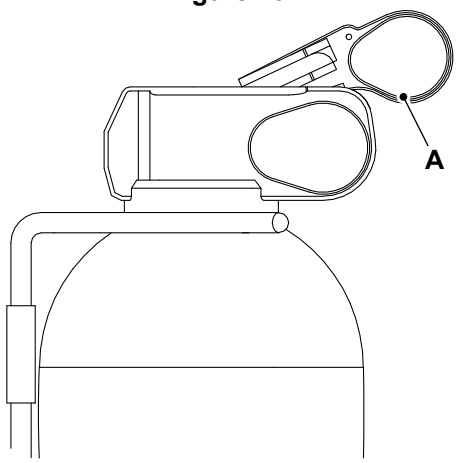


**A** Trigger

# Moving a Disabled Machine

## General

⚠ **WARNING** Use a rigid drawbar. If a towing chain must be used, then use two towing vehicles. One towing vehicle should be coupled to the front of the disabled machine. The other towing vehicle should be coupled to the rear of the disabled machine, to provide braking power. The towing vehicle must have enough pulling and braking power to move and stop the machine.

**WARNING** Always make sure the articulation lock has been removed before attempting to drive the machine. The machine cannot be steered with the articulation lock installed.

**CAUTION** The machine must be securely tied down to the transport vehicle to prevent lateral movement, fore-and-aft movement, and slewing of the upper structure. Failure to do so could cause injury to yourself or others.

**Notice:** Towing a machine too far or too fast can damage the transmission. Do not tow the machine further than 200m. Use a trailer for greater distances. When towing do not travel faster than 3km/h ( 2 mph). Use a rigid draw-bar. If a towing chain must be used, then use two towing vehicles. One towing vehicle should be coupled to the front of the disabled machine. The other towing vehicle should be coupled to the rear of the disabled machine, to provide braking power. The towing vehicle(s) must have enough pulling and braking power to move and stop the machine.

**Notice:** It is not recommended to tow a disabled machine. Permanent damage to the track motors of the disabled machine may occur if the machine is towed.

If the machine becomes disabled, the machine must be made safe, lifted onto a transporter and moved to a location where it can be repaired.

You must contact your nearest JCB dealer before you try to tow, winch or push the machine.

Towing, winching or pushing the machine without following the correct procedure will damage parts of the hydraulic system. If possible, repair the disabled machine where it stands.

In the event that towing the machine to a safe location is unavoidable follow the procedure given.

Apply the minimum force to move the machine slowly smoothly and without shocks. Tow the machine the minimum distance to a safe location for recovery by lifting.

Following this procedure the machine should be inspected by a qualified person for damage to the drive motors.

Before towing, the park brake must be manually deactivated on the machine. After the machine has been towed the brake must be reactivated.

## Jump-Starting the Engine

⚠ **WARNING** In temperatures below freezing, the battery electrolyte may freeze if the battery is discharged or poorly charged. Do not use a battery if its electrolyte is frozen. To prevent the battery electrolyte from freezing, keep the battery at full charge.

If you try to charge a frozen battery or jump-start and run the engine, the battery could explode.

Batteries produce a flammable gas, which is explosive. Do not smoke when checking the electrolyte levels.

When jump-starting from another vehicle, make sure that the two vehicles do not touch each other. This prevents any chance of sparks near the battery.

Switch off all circuits which are not controlled by the ignition key.

Do not connect the booster (slave) supply directly across the starter motor.

Do not connect the booster (slave) supply directly to the alternator.

Use only sound jump leads with securely attached connectors. Connect one jump lead at a time.

The machine has a negative earth electrical system. Check which battery terminal is positive (+) before making any connections. Keep metal watch straps and jewellery away from the jump lead connectors and the battery terminals - an accidental short could cause serious burns and damage equipment. Make sure you know the voltage of the machine. The booster (slave) supply must not be higher than that of the machine. Using a higher voltage supply will damage your machine's electrical system. If you do not know the voltage

of your booster (slave) supply, then contact your JCB dealer for advice. Do not attempt to jump-start the engine until you are sure of the voltage of the booster (slave) supply. The negative (-) terminal on the battery is connected to frame earth.

1. Set all switches in the operator station to their OFF positions.
2. Get access to the battery.
3. Connect the booster cables:
   3.1. Connect the positive booster cable to the positive (+) terminal on the machine battery. Connect the other end of this cable to the positive (+) terminal of the booster supply.
   3.2. Connect the negative (-) booster cable to a good frame earth on the machine, away from and below the battery. A good frame earth is a part of the machine frame, free from paint and dirt. Do not use a pivot pin for an earth.
   3.3. Connect the other end of this cable to the negative (-) terminal on the booster supply.
4. Do the pre-start checks.
5. Start the engine.
6. Disconnect the booster cables:
   6.1. Disconnect the negative booster cable from the machine frame earth. Then disconnect it from the booster supply.
   6.2. Disconnect the positive booster cable from the positive (+) terminal on the battery. Then disconnect it from the booster supply.

## Retrieval

It is not recommended to tow a disabled machine. Permanent damage to the drive motors of the disabled machine may occur if the machine is towed.

If the machine becomes disabled, the machine should be made safe, lifted onto a transporter and moved to a location where is can be repaired.
Refer to: Lifting the Product (Page 72).

In the event that towing the machine to a safe location is unavoidable follow the procedure given.

***Notice:*** *Towing a machine too far or too fast can damage the transmission. When towing prepare the machine as described. Failure to comply will result in lack of lubrication and seizure of the transmission motor and pump.*

For distances greater than one mile, transport the machine on a suitable vehicle.
Refer to: Loading onto the Transporting Vehicle (Page 74).

The machine must have the mechanical brake deactivated before towing. After the machine has been towed the brake must be reactivated.

The maximum permissible towing force is 68kN.

1. Set the drive lever in the neutral position.
2. Attach drawbars or chains to the front or rear tow eye.

**Figure 41.**

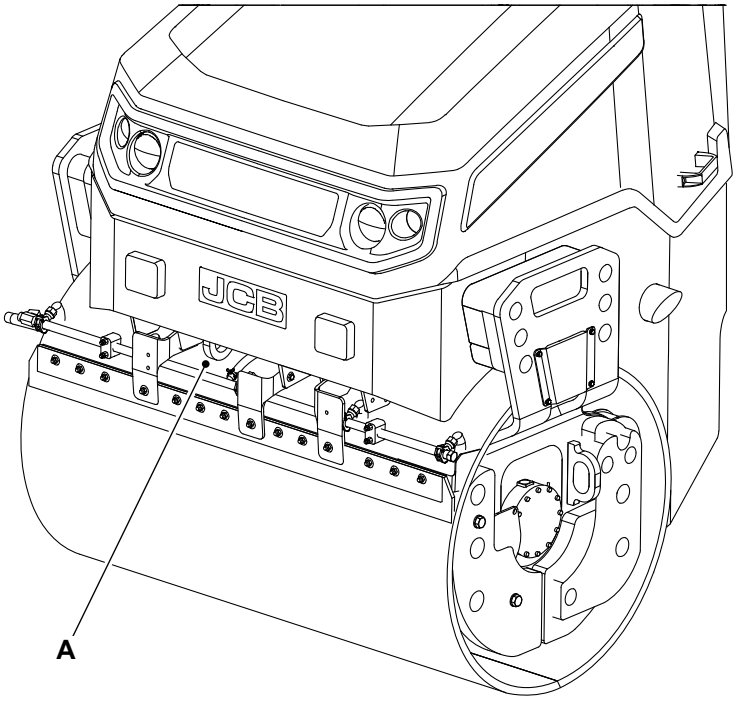


**A** Front tow eye

**Figure 42.**

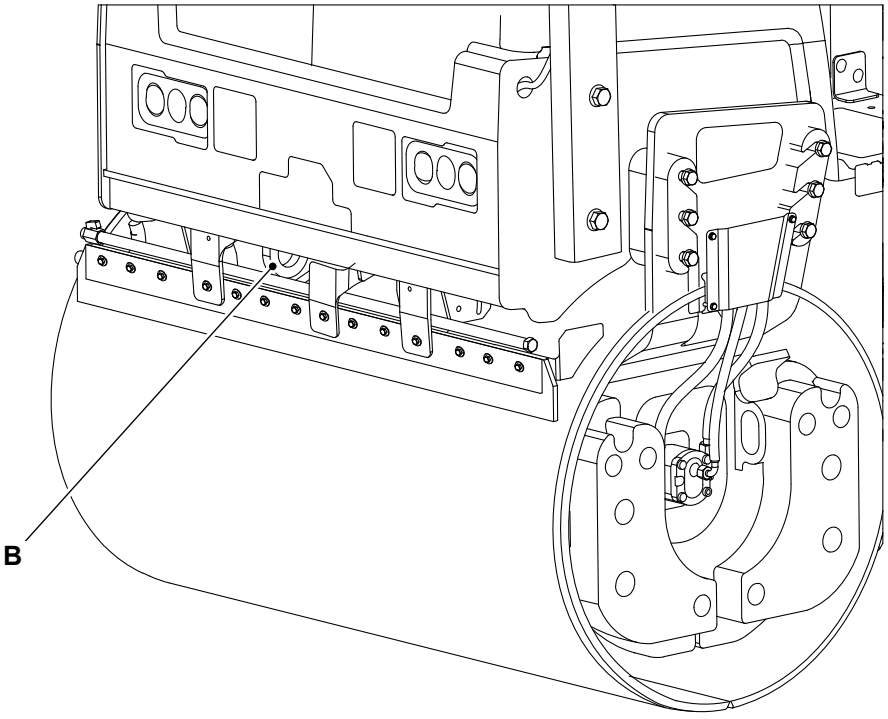


**B** Rear tow eye

***WARNING!*** *Always make sure the articulation lock has been removed before attempting to drive the machine. The machine cannot be steered with the articulation lock installed.*

3. Make sure that the articulation lock is in the drive position.

Refer to: Articulation Lock (Page 45).

## Manual Brake Deactivation

1. Remove the plug from the brake end cover screw.

**Figure 43.**

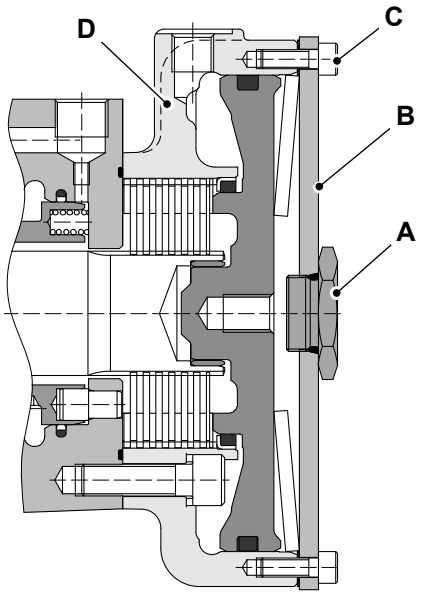


**A** Plug
**B** Brake end cover
**C** Brake end cover screw
**D** Drive motor

2. Tighten the bolt to the bottom of the threading in the brake piston.
3. Tighten the nut while holding the bolt, until the motor shaft turns freely.

**Figure 44.**

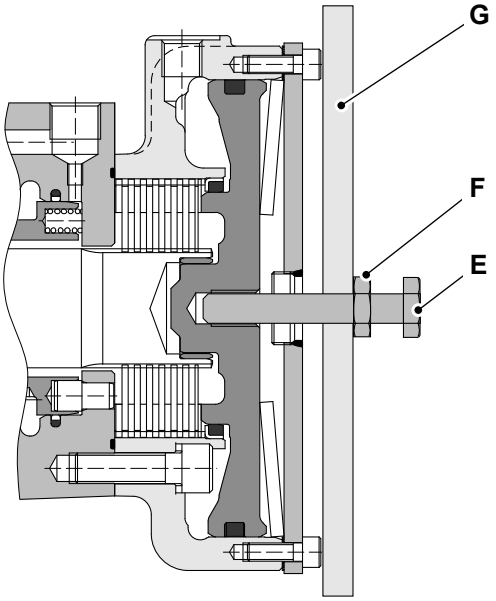


**E** Bolt M16
**F** Nut
**G** Plate
**H** Brake piston

4. Repeat steps 1 to 3 to other travel motor.
5. After towing install the plug on brake end cover.

## Drive Pump Circuit Bypass

The flow can be altered using a bypass circuit in order to tow the vehicle out of the immediate danger zone. Turning the corresponding screw allows the hydraulic fluid to flow freely.

If necessary, it is recommended to activate the bypass function on both pressure relief valves (avoiding a function in only one travel direction).

The bypass function must be deactivated again before restarting the machine.

### Activating the Bypass Function

1. Turn OFF the engine.
2. Remove the protection caps from the relief valve.
3. Measure and note the screw length, before loosening the lock nut.

**Figure 45.**

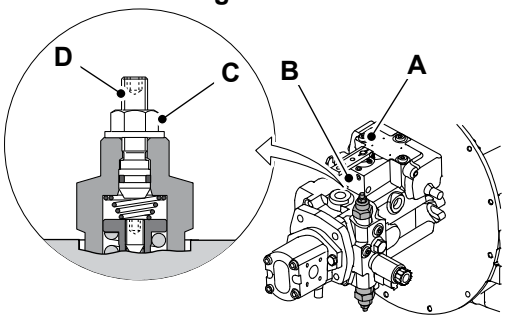


**A** Travel Pump
**B** Relief Valve
**C** Lock nut
**D** screw

4. Loosen the lock nut by one half-turn with 13mm A/F spanner.
5. Use a hexagon socket wrench AF4 to turn the screw clockwise until the screw is against the spring seat. This is indicated by the increased resistance. Then turn the screw one half-turn clockwise.
6. Tighten the lock nut to the specified torque value.

   Torque: 22N·m
7. Repeat steps 2 to 6 for other relief valve.

### Deactivating the Bypass Function

After towing, turn off the bypass function immediately.

1. Loosen the lock nut by one half-turn with 13mm A/F spanner.
2. Use 4mm A/F hexagon socket wrench to turn the screw anti clockwise until the screw length reaches the measured length noted during activation.
3. Tighten the lock nut to the specified torque value.

   Torque: 22N·m
4. Install the protection caps on the relief valve.

# Lifting the Product

## General

⚠ **DANGER** Do not stand underneath the raised load during the lifting/lowering procedure. Stand clear and to one side until the load has been safely lowered. Make sure that the area is clear of other people before lowering the load. If you do not follow these precautions you or others could be killed or seriously injured.

1. Park the machine on solid, level ground.
   Refer to: Stopping and Parking (Page 43).
2. Turn the ignition key to the off position.
3. Stop the engine.
4. Install the articulation lock.
   Refer to: Articulation Lock (Page 45).
5. Make sure there are no loose items in the cab or on the machine.
6. Check the unladen weight of the machine.
   Refer to: Static Dimensions (Page 141).
7. Machine can be lifted using the lift points provided on the carrier plate. Contact your local JCB dealer for more information.
   Refer to: Lifting Points (Page 73).
8. The correct lift-point position is identified on the machine by a label.
   Refer to: Lifting Points (Page 73).
9. Lift the machine slightly to check the balance of the machine and the installation of the lifting equipment. If the machine does not lift horizontally, adjust the length of the slings. Proceed slowly and evenly until the lift is complete.
10. Keep the machine horizontal during the lift.

## Lifting Points

**Figure 46. Lifting Points**

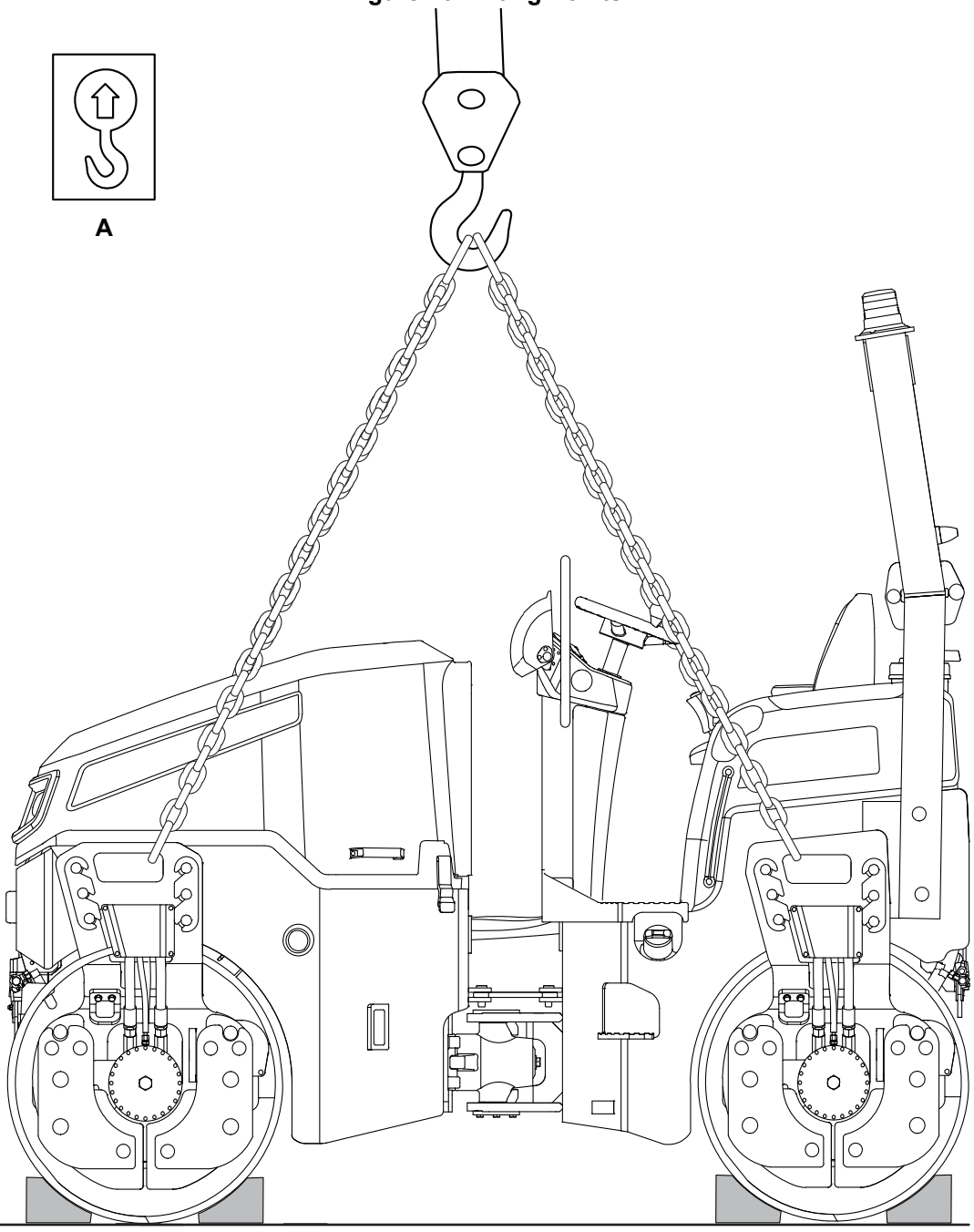


**A** Lifting label

# Transporting the Product

## General

⚠ **WARNING** The safe transit of the load is the responsibility of the transport contractor and driver. Any machine, attachments or parts that may move during transit must be adequately secured.

**CAUTION** Before moving the machine onto the trailer, make sure that the trailer and ramp are free from oil, grease and ice. Remove oil, grease and ice from the machine tyres. Make sure the machine will not foul on the ramp angle.

Check the condition of the transport vehicle before the machine is loaded on to its trailer.

Make sure that the transport trailer is suitable for the dimensions and weight of your machine.

Before transporting the machine make sure you will be obeying the local rules and laws regarding machine transportation of all the areas that the machine will be carried through.

## Loading onto the Transporting Vehicle

⚠ **WARNING** The safe transit of the load is the responsibility of the transport contractor and driver. Any machine, attachments or parts that may move during transit must be adequately secured.

**WARNING** Make sure the articulation lock is in the transport position before you transport the machine. The articulation lock must also be in the transport position if you are carrying out daily checks or doing any maintenance work in the articulation danger zone. If the articulation lock is not in the transport position you could be crushed between the two parts of the chassis.

**WARNING** Always make sure the articulation lock has been removed before attempting to drive the machine. The machine cannot be steered with the articulation lock installed.

**CAUTION** You can be injured if you use incorrect or faulty lifting equipment. You must identify the weight of the item to be lifted then choose lifting equipment that is strong enough and suitable for the job. Make sure that lifting equipment is in good condition and complies with all local regulations.

Before transporting the machine make sure you will be obeying the rules and laws of all the areas that the machine will be carried through.

Make sure that the transporting vehicle is suitable for the dimensions of your machine, refer to Specifications, Static Dimensions.

**Table 12. Lashing Capacity**

| | Force | Proof Force | Breaking Force |
|---|---|---|---|
| Forward | 5,615N | 7,019N | 11,230N |
| Backward | 5,615N | 7,019N | 11,230N |
| Laterally | 1,403N | 1,754N | 2,807N |

1. Place blocks at the front and rear of the trailer wheels.
   Refer to: Tie Down Points (Page 76).
2. Install the articulation lock.
   Refer to: Articulation Lock (Page 45).
3. Using suitable lifting equipment, lift the machine onto the trailer.
   Refer to: Lifting the Product (Page 72).
4. Put blocks at the front and rear of the machine. Using the tie down points anchor the machine to the trailer with chains.
   Refer to: Articulation Lock (Page 45).
5. Measure the maximum height of the machine from the ground. Make sure the truck driver knows the clearance height before he drives away.

6. If necessary, fold down the ROPS (Roll-Over Protective Structure) frame as follow:

   6.1. Two people are required to fold the ROPS frame.

   6.2. Remove the cotter pin. Refer to Figure 47.

   6.3. Remove the ROPS lock pin using tommy bar. Refer to Figure 47.

**Figure 47.**

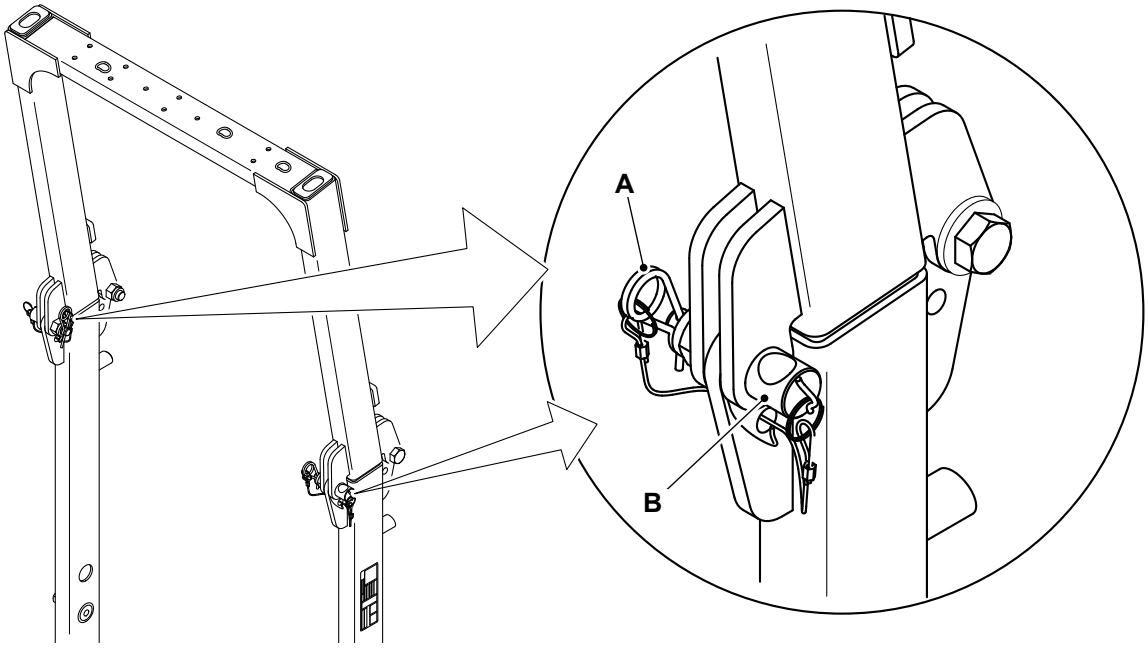


**A** Cotter pin **B** ROPS lock pin

   6.4. Make sure that area is clear of people. Carefully fold down the ROPS frame. Refer to Figure 48.

**Figure 48.**

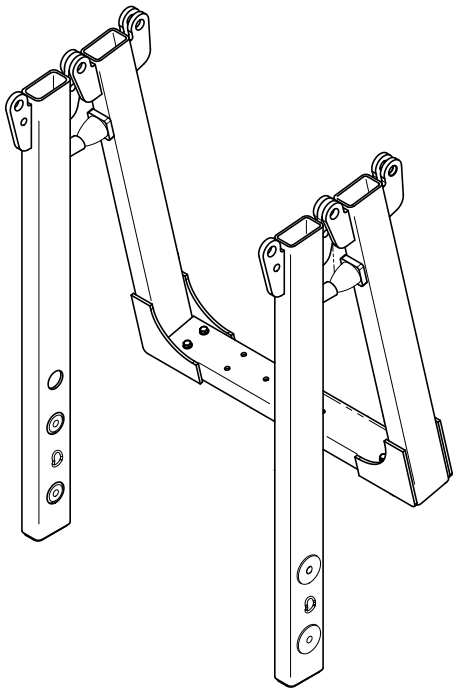

   6.5. After transporting the machine, unfold the ROPS frame. Make sure that lock pin and cotter pin are installed correctly.

# Tie Down Points

**Figure 49.**

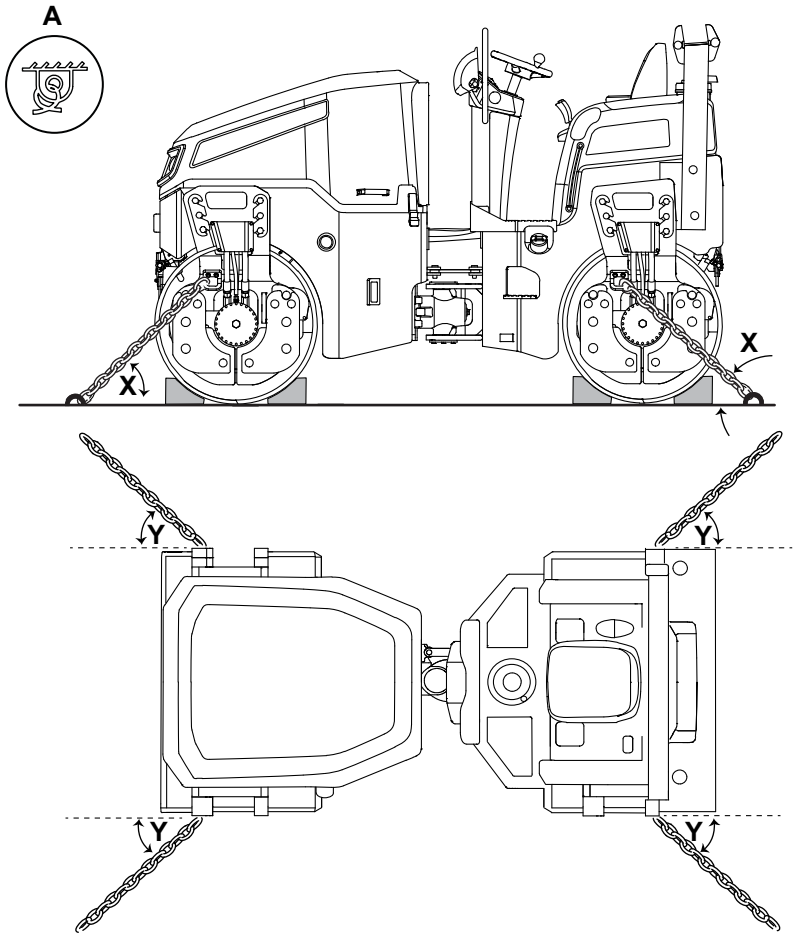


**A** Tie down decal
**Y** 45°
**X** 35°

# Operating Environment

## General

### Operating in Dusty or Sandy Areas

1. Air Cleaner. Frequently check, clean or replace the elements regardless of the inspection interval. (Not the safety element).
2. Securely tighten the hydraulic oil tank filler cap to prevent sand and dust from entering the hydraulic system.
3. Front and rear scrapers should be released from the drum. Rotate and lock the scrapers away from the drum.
4. Water is not necessary in this environment.

### Operating in Coastal Regions

1. Check that all the plugs, bolts, and fasteners are all tightened properly.
2. After daily operations, wash the machine thoroughly and take special care when cleaning the electrical devices and hydraulic cylinders to prevent salt entry and eventual corrosion.

### Operating on Wet or Soft Ground

1. Clean the Machine. Moisture or mud will cause the paint, wiring and metallic parts to deteriorate. When operating the machine keep it as dry as possible and regularly grease the machine.

In low and high temperature conditions, -20°C (-4.0°F) to 46°C (114.7°F) , take the following precaution. This will make it easier to start and prevent possible damage to your machine.

## Operating in Low Temperatures

⚠ **Notice:** Do not use ether or other starting fluids to assist cold starting. Using these fluids may result in an explosion causing possible injury and/or damage to the engine.

In low temperature situations, take the following precautions. They will make for easier starting and prevent possible damage to your machine.

1. Use the correct viscosity engine lubricating oil.

   Refer to: Fluids, Lubricants and Capacities (Page 149).
2. Use the correct viscosity hydraulic oil.
3. If available, use a low temperature diesel fuel.
4. Use the correct coolant mixture.
5. Keep the battery at full charge.
6. Fill the fuel tank at the end of each work period, this will help to prevent condensation forming on the tank walls.
7. Protect the machine when its not in use. Park the machine inside a building or cover it with a tarpaulin.
8. Before the engine is started, remove any snow from the engine compartment or snow could get into the air filter.
9. The acceleration and braking behaviour of the machine are influenced by the viscosity of the hydraulic oil. In case of low ambient temperatures the machine requires a warm-up with moderate speed and loads until the oil in the hydraulic system has warmed up to the temperature specified.

   Temperature: 20°C (68.0°F)
   Refer to: Starting the Engine (Page 40).

## Operating in High Temperatures

In high temperature situations, take the following precautions to prevent possible damage to the machine.

1. Use the correct viscosity engine lubricating oil.
2. Use the correct coolant mixture.
3. Check the coolant system regularly, keep the coolant at the correct level. Make sure there are no leaks.
4. Keep the radiator/oil cooler clean, regularly remove dirt and debris from the radiator/oil cooler and the engine.
5. Check the fan belt regularly.
6. Check the air vents. Make sure that the air vents to and from the engine compartment are not blocked.
7. Check the engine pre-cleaner regularly (if installed).
8. Check the battery electrolyte level.

# Refuelling

## General

⚠ **CAUTION** Spilt fuel may cause skidding and therefore accidents. Clean any spilt fuel immediately.

Do not use fuel to clean the machine.

When filling with fuel, choose a well aired and ventilated area.

**Notice:** Consult your fuel supplier or JCB dealer about the suitability of any fuel you are unsure of.

## Filling the Tank

⚠ **WARNING** Do not use petrol in this machine. Do not mix petrol with the diesel fuel. In storage tanks the petrol will form flammable vapours.

**Notice:** No warranty liability whatsoever will be accepted for failure of fuel injection equipment where the failure is attributed to the quality and grade of the fuel used.

If you use the incorrect type of fuel or fuel which is contaminated, then damage to the fuel injection system can occur.
Refer to: General (Page 149).

Fill the fuel tank at the end of each work period, this will help to prevent condensation forming on the tank walls.

To fill the diesel tank:

1. Make the machine safe.
   Refer to: General (Page 43).
2. Remove all the unwanted material around the diesel fuel cap. Refer to Figure 50.
3. Remove the diesel fuel tank filler cap.
4. Add the fuel through the filler neck until it reaches the full mark.
5. Install the diesel fuel tank filler cap. Refer to Figure 50.
6. If there is any fuel spillage, clean it immediately.

**Figure 50.**

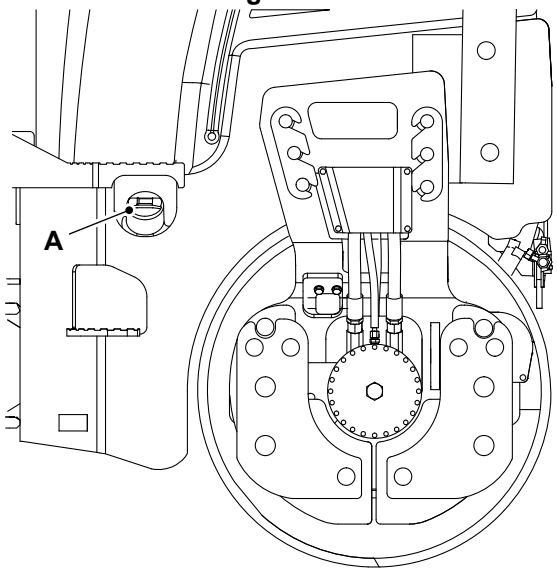


**A** Diesel tank filler cap

Notes:

# Preservation and Storage
## Cleaning

## General

⚠ **WARNING** When using cleaning agents, solvents or other chemicals, you must adhere to the manufacturer's instructions and safety precautions.

**WARNING** Airborne particles of light combustible material such as straw, grass, wood shavings, etc. must not be allowed to accumulate within the engine compartment or in the propshaft guards (when installed). Examine these areas frequently and clean at the beginning of each work shift or more often if required. Before opening the engine cover, make sure that the top is clear of debris.

**CAUTION** To avoid burning, wear personal protective equipment when handling hot components. To protect your eyes, wear goggles when using a brush to clean components.

**Notice:** Cleaning metal parts with incorrect solvents can cause corrosion. Use only recommended cleaning agents and solvents.

**Notice:** The efficiency of the rams will be affected if they are not kept free of solidified dirt. Clean dirt from around the rams regularly. When leaving or parking the machine, close all rams if possible to reduce the risk of weather corrosion.

**Notice:** Never use water or steam to clean inside the operator station. The use of water or steam could damage the machine electrics and render the machine inoperable. Remove dirt using a brush or damp cloth.

Clean the machine with water and/or steam. Do not let mud, debris etc. to collect on the machine.

Before you do any service procedures that require components to be removed:

- The cleaning must be done either in the area of components to be removed, or in the case of major work, or work on the fuel system, the whole engine and the surrounding machine must be cleaned.
- When cleaning is complete, move the machine away from the wash area or alternatively, remove the material washed from the machine.

When you remove components, be aware of exposure to dirt and debris. Cover any open ports and remove the deposits before proceeding.

Refer to the individual clean procedures throughout the Maintenance section.
Refer to: Maintenance Schedules (Page 94).

### Detergents

Do not use a full strength detergent. Always dilute the detergents as per the manufacturer's recommendations, or damage to the paint finish can occur.

Always obey the local regulations regarding the disposal of debris created from cleaning the machine.

### Pressure Washing and Steam Cleaning

⚠ **CAUTION** When using a steam cleaner, wear safety glasses or a face shield as well as protective clothing. Steam can cause personal injury.

**Notice:** The batteries and other electrical components could be damaged by high pressure washing systems. Special precautions must be taken if the machine is to be washed using a high pressure system.

Use a low pressure washer and brush to remove dried mud or dirt.

Use a steam cleaner to remove soft dirt and oil.

When cleaning around decals:

- Ensure the water pressure is kept below 138bar (2,001.5psi).
- Keep water temperature below 80°C (176°F).
- Use a spray nozzle with a 40° wide angle spray pattern.

- Keep the nozzle at least 300mm (11.81 in) away from and perpendicular (at 90° degrees) to the decal.

The machine must always be greased (if appropriate) after pressure washing or steam cleaning.

## Preparation

1. Make the machine safe.
   Refer to: Maintenance Positions (Page 99).
2. Stop the engine and let it cool for at least one hour. Do not try to clean any part of the engine while it is running.
3. Make sure that all of the electrical connectors are correctly coupled. If the connectors are open, attach the correct caps or seal with water proof tape.

# Checking For Damage

## General

Refer to the individual condition checks throughout the Maintenance section.
Refer to: Maintenance Schedules (Page 94).

# Storage

## General

If the machine will not be used for an extended period, you must store the machine correctly. If you prepare the machine carefully and apply on-going care you can prevent deterioration and damage to the machine while it is in storage.

### Storage Area

The machine can be stored in a temperature range of: -40°C (-39.9°F) to 54°C (129.1°F)

When possible, you must keep the machine in a dry building or shelter.

If only an outdoor storage area is available, look for a storage area with good drainage.

### Prepare the Machine for Storage

1. Clean the machine to remove all unwanted material and corrosive products.
2. Dry the machine to remove solvents and moisture.
3. Touch-up any damaged paint.
4. Apply grease to the moving parts (if applicable).
5. Examine the machine for worn or damaged parts. Replace if necessary.
6. Fill the fuel tank to prevent a build up of condensation in the tank (if applicable).
7. Examine the coolant condition. Replace if necessary.
8. Examine all fluid levels. Top up if necessary.

## Put into Storage

1. Park the machine on solid, level ground.
    1.1. Park the machine in an area where it is easy to access. (In case the machine does not start at the end of the storage period).
    1.2. Put suitable timbers under the machine to eliminate direct contact with the ground.
2. Retract all of the rams and lower the attachment to the ground.
3. Vent the hydraulic system.
4. Remove the ignition key.
5. Apply a thin layer of grease or petroleum jelly to all of the exposed ram piston rods.
6. Remove the battery.
    6.1. Keep the battery in warm, dry conditions.
    6.2. Charge the battery periodically.
7. If you keep the machine outdoors, cover the machine with tarpaulins or plastic sheets.

## During Storage

Operate the machine functions each week to prevent a build up of rust in the engine and hydraulic circuits, and to minimise the deterioration of the hydraulic seals.

1. Remove any air cleaner covers or exhaust covers.
2. Remove the grease or petroleum jelly from the ram piston rods.

3. Examine all fluid levels. If necessary, add more fuel.
4. Install a charged battery.
5. Start the engine.
6. Operate the hydraulic controls. Make sure that the hydraulic functions operate correctly.
7. Prepare the machine for storage.

## Take out of Storage

1. Drain the fuel tank to remove any water. Use the drain plug under the tank or the optional drain tap.
2. Examine the coolant condition. Replace if necessary.
3. Examine all fluid levels. If necessary replace the fluid or add more fluid.
4. Clean the machine to remove all unwanted material and corrosive products. Dry the machine to remove solvents and moisture
5. Remove the grease or petroleum jelly from the ram piston rods.
6. Install a charged battery.
7. Start the engine.
8. Operate the hydraulic controls. Make sure that the hydraulic functions operate correctly.

# Security

## General

Vandalism and the theft of unattended machines is an ever increasing problem and JCB is doing everything possible to help stop this.

Your JCB dealer will be pleased to provide information on any of these sensible precautions. Act now!

## Construction Equipment Security and Registration Scheme (CESAR)

CESAR (Construction Equipment Security and Registration) is a simple, effective method of machine identification and registration that operates throughout the United Kingdom and Ireland and across the whole spectrum of JCB products.

CESAR is a scheme to help decrease plant theft, and was developed by the Metropolitan Police and the Home Office Plant Theft Action Group.

The key to the scheme is its simplicity and it will mean that every police officer in the country will know how to identify construction machinery and verify ownership. This will provide a major leap forward in both protecting machinery, and recovering it.

The Construction Equipment Association is managing the scheme, and Datatag are providing the security material and support. JCB is fully supportive of the CESAR initiative and will offer it as a factory option across the range.

The CESAR kit includes 2 tamper proof triangular identification plates installed on either side of the machine, a unique transponder, mini radio frequency identification tags concealed throughout the machine, Datatag micro dots, and a unique DNA coded chemical painted on the machines major components. Plus a registration certificate logged onto the CESAR or DVLA databases, and a change of keeper form.

## LiveLink

Your JCB machine may be installed with LiveLink, JCB's advanced machine monitoring system. LiveLink monitors a range of information about your machine and sends it through cellular and satellite communication back to JCB's secure monitoring centre.

The machine owners and JCB dealers can then view that information through the LiveLink website, by email and even through text message. If you want to know how LiveLink can help manage your JCB machines, contact your local dealer for more information.

# Maintenance
## Introduction

## General

Your machine has been designed and built to give maximum performance, economy and ease of use under a wide variety of operating conditions. Prior to delivery, your machine was inspected both at the factory and by your dealer to make sure that it reaches you in optimum condition. To maintain this condition and trouble free operation it is important that the routine services and maintenance, as specified in this manual, are done at the recommended specified intervals and it is recommended that this is done by an approved JCB dealer using genuine JCB parts. Servicing/repairs carried out by unauthorised personnel or the use of non-genuine inferior quality parts could limit machine warranty.

After completing any routine servicing, maintenance or repairs you must complete the functional checks according to the maintenance schedule.

This section of the manual gives full details of the service requirements necessary to maintain your JCB machine at peak efficiency.

It can be seen from the service schedules on the following pages that many essential service checks must only be done by a JCB trained specialist competent person. JCB dealer service engineers have been trained by JCB to do such specialist tasks, and are equipped with the necessary special tools and test equipment to do such tasks, thoroughly, safely, accurately and efficiently.

JCB regularly updates its dealers to advise them of any machine developments, changes in specifications and procedures. Therefore only a JCB dealer is fully able to safely service the machine to the latest requirements, which makes them best placed to maintain and service your machine.

A service record sheet or book is provided at the back of this publication which will enable you to plan your service requirements and keep a service history record. It must be dated, signed and stamped by your dealer each time your machine is serviced.

Remember, if your machine has been correctly maintained, not only will it give you improved reliability but its resale value will be greatly enhanced.

When the machine is removed from service, local regulations for machine decommissioning and disposal will vary. Contact your nearest JCB dealer for further information.

## Owner/Operator Support

JCB together with your dealer wants you to be completely satisfied with your new JCB machine. However, if you do have a problem, you can contact your dealer's service department who are there to help you!

You will have been given the names of the relevant service contacts at your dealer when the machine was supplied.

To get the most from your dealer please help them to satisfy you by providing them with:

1. Your name, address and telephone number.
2. Your machine model and serial number.
3. The date of purchase and hours of work.
4. The nature of the problem.

Remember, only your JCB dealer has access to the vast resources available at JCB to help support you. In addition, your dealer is able to offer a variety of programmes covering warranty, fixed price servicing, safety inspections, including weight tests, covering both legal and insurance requirements.

It is machine owner's responsibility to ensure that the maintenance is carried out properly in accordance with the requirement of this manual.

## Service/Maintenance Agreements

To help plan and spread the costs of maintaining your machine, we strongly recommend you take advantage of the many service and maintenance agreements your dealer can offer. These can be tailor made to meet your operating conditions, work schedule etc.

Please consult your JCB dealer for details.

## Initial Service and Inspection

To further protect your machine's performance it is essential your JCB distributor carries out an initial service and inspection when the machine is three months old or when it has completed 250h of operation (whichever occurs first). You should notify your distributor in advance to allow the necessary arrangements to be made.

## Obtaining Spare Parts

If you use non-genuine JCB parts or consumables, they could cause compatibility issues, malfunctions or failures. The health and safety of the operator and bystanders could be compromised.

A parts book for your machine is available from your JCB dealer. The parts book will help you identify parts and order them from your JCB dealer.

Your dealer will need to know the exact model, build and serial number of your machine.
Refer to: Product and Component Identification (Page 12).

The data plate also shows the serial numbers of the engine, transmission and axle(s), where applicable. Remember, if any of these units have been changed, the serial number on the data plate may be wrong. Check on the unit itself.

# Maintenance Safety

## General

**Raised Machine**

Never position yourself or any part of your body under a raised machine which is not correctly supported. If the machine moves unexpectedly you could become trapped and suffer serious injury or be killed.

**Compressed Air**

Compressed air is dangerous. Wear personal protective equipment. Never point a compressed air jet at yourself or others.

**Springs**

Always wear personal protective equipment when dismantling assemblies containing components under pressure from springs. This will protect against eye injury from components accidentally flying out.

**Metal Splinters**

You can be injured by flying metal splinters when driving metal pins in or out. Use a soft faced hammer or copper drift to remove and install metal pins. Always wear personal protective equipment.

**Communications**

Bad communications can cause accidents. If two or more people are working on the machine, make sure each is aware of what the others are doing. Before starting the engine make sure the others are clear of the danger areas. Examples of danger areas are: the rotating blades and belt on the engine, the attachments and linkages, and anywhere beneath or behind the machine. People can be killed or injured if these precautions are not taken.

You must stop the machine operation, isolate the controls and turn off the engine when persons are required to interact with the machine.

**Repairs**

If your machine does not function correctly in any way, get it repaired straight away. Neglect of necessary repairs could result in an accident or affect your health. Do not try to do repairs or any other type of maintenance work you do not understand. To avoid injury and/or damage get the work done by a specialist engineer.

**Hydraulic Pressure**

Hydraulic fluid at system pressure can injure you. Before connecting or removing any hydraulic hose, residual hydraulic pressure trapped in the service hose line must be vented. Make sure the hose service line has been vented before connecting or removing hoses. Make sure the engine cannot be started while the hoses are open.

**'O' rings, Seals and Gaskets**

Badly installed, damaged or rotted 'O' rings, seals and gaskets can cause leakages and possible accidents. Renew whenever disturbed unless otherwise instructed. Do not use Trichloroethane or paint thinners near 'O' rings and seals.

**Arc Welding**

To prevent the possibility of damage to electronic components, disconnect the battery and the alternator before arc-welding on the machine or attached implements.

If the machine is equipped with sensitive electrical equipment, i.e. amplifier drivers, electronic control units (ECUs), monitor displays, etc., then disconnect them before welding. Failure to disconnect the sensitive electrical equipment could result in irreparable damage to these components.

Parts of the machine are made from cast iron, welds on cast iron can weaken the structure and break. Do not weld cast iron. Do not connect the welder cable or apply any weld to any part of the engine.

Always connect the welder earth (ground) cable to the same component that is being welded to avoid damage to pivot pins, bearings and bushes. Attach the welder earth (ground) cable a distance from the part being welded no more than 0.6m.

**Counterweights**

Your machine may be installed with counterweights. They are extremely heavy. Do not attempt to remove them.

**Accumulators**

The accumulators contain hydraulic fluid and gas at high pressure. Prior to any work being carried out on systems incorporating accumulators, the system pressure must be discharged by a JCB dealer, as the sudden release of the hydraulic fluid or gas may cause serious injury or death.

**Hot Components**

Touching hot surfaces can burn skin. The engine and machine components will be hot after the unit has been running. Allow the engine and components to cool before servicing the unit.

**Soft Ground**

A machine can sink into soft ground. Never work under a machine on soft ground.

**Working Under the Machine**

Make the machine safe before getting beneath it. Make sure that any attachments on the machine are correctly attached. Engage the park brake, remove the ignition key, disconnect the battery. If the machine has wheels use blocks to prevent unintentional movement.

**Lifting Equipment**

You can be injured if you use incorrect or faulty lifting equipment. You must identify the weight of the item to be lifted then choose lifting equipment that is strong enough and suitable for the job. Make sure that lifting equipment is in good condition and complies with all local regulations.

**Chemicals**

Certain seals and gaskets (e.g. crankshaft oil seal) on JCB machines contain fluoroelastomeric materials such as Viton®, FluorelTM and Technoflon®. Fluoroelastomeric materials subjected to high temperatures can produce highly corrosive hydrofluoric acid. This acid can severely burn. New fluoroelastomeric components at ambient temperature require no special safety precautions. Used fluoroelastomeric components whose temperatures have not exceeded 300°C ( 572 °F) require no special safety precautions. If evidence of decomposition (e.g. charring) is found, refer to the next paragraph for safety instructions. Do not touch component or surrounding area. Used fluoroelastomeric components subjected to temperatures greater than 300°C ( 572 °F) (e.g. engine fire) must be treated using the following safety procedure. Make sure that heavy duty gloves and special safety glasses are worn: Thoroughly wash contaminated area with 10% calcium hydroxide or other suitable alkali solution, if necessary use wire wool to remove burnt remains. Thoroughly wash contaminated area with detergent and water. Contain all removed material, gloves etc. used in this operation in sealed plastic bags and dispose of in accordance with Local Authority Regulations. Do not burn fluoroelastiometric materials.

**Hydraulic Hoses**

Never re-use hydraulic hose end crimps or use reusable hose end crimps.

**Personal Protective Equipment**

Use the appropriate personal protective equipment before performing maintenance on the machine, otherwise you could be injured.

**Working at Height**

Use appropriate access equipment such as ladders or a working platform if it is necessary to work at height to perform maintenance tasks on the machine. If you do not use suitable access equipment there is a risk of falling, resulting in personal injury or death.

## Fluids and Lubricants

**Oil**

Oil is toxic. If you swallow any oil, do not induce vomiting, seek medical advice. Used engine oil contains harmful contaminants which can cause skin cancer. Do not handle used engine oil more than necessary. Always use barrier cream or wear gloves to prevent skin contact. Wash skin contaminated with oil thoroughly in warm soapy water. Do not use petrol, diesel fuel or paraffin to clean your skin.

**Fluid Under Pressure**

Fine jets of fluid at high pressure can penetrate the skin. Keep face and hands well clear of fluid under pressure and wear personal protective equipment. Hold a piece of cardboard close to suspected leaks and then examine the cardboard for signs of fluid. If fluid penetrates your skin, get medical help immediately.

**Fuel**

Fuel is flammable, keep naked flames away from the fuel system. Stop the engine immediately if a fuel leak is suspected. Do not smoke while refuelling or working on the fuel system. Do not refuel with the engine running. Completely wipe off any spilt fuel which could cause a fire. There could be a fire and injury if you do not follow these precautions.

**Antifreeze**

Never perform checks or maintenance on the cooling system when it is hot. Never remove radiator cap when engine is hot - severe risk of scalding. Never remove radiator cap when the engine is running. Antifreeze is toxic. If accidentally swallowed, medical advice must be sought Immediately. Antifreeze is corrosive to the skin. If accidentally spilled on to skin, it must be washed off immediately. Protective clothing and eye protection must be worn when handling antifreeze.

## Hygiene

JCB lubricants are not a health risk when used correctly for their intended purposes.

However, excessive or prolonged skin contact can remove the natural fats from your skin, causing dryness and irritation.

Low viscosity oils are more likely to do this, so take special care when handling used oils, which might be diluted with fuel contamination.

Whenever you are handling oil products you must maintain good standards of care and personal and plant hygiene. For details of these precautions we advise you to read the relevant publications issued by your local health authority, plus the following.

## Storage

Always keep lubricants out of the reach of children.

Never store lubricants in open or unlabelled containers.

## Waste Disposal

⚠ **CAUTION** It is illegal to pollute drains, sewers or the ground. Clean up all spilt fluids and/or lubricants.

Used fluids and/or lubricants, filters and contaminated materials must be disposed of in accordance with local regulations. Use authorised waste disposal sites.

**CAUTION** Damaged or spent batteries and any residue from fires or spillage must be put in a suitable closed receptacle and must be disposed of in accordance with local environmental waste regulations.

All waste products must be disposed of in accordance with all the relevant regulations.

The collection and disposal of used oil must be in accordance with any local regulations. Never pour used engine oil into sewers, drains or on the ground.

## Handling

⚠ **CAUTION** The temperature of the hydraulic oil will be high soon after stopping the machine. Wait until it cools before beginning maintenance.

### New Oil

There are no special precautions needed for the handling or use of new oil, beside the normal care and hygiene practices.

### Used Oil

Used engine crankcase lubricants contain harmful contaminants.

Here are precautions to protect your health when handling used engine oil:

- Avoid prolonged, excessive or repeated skin contact with used oil
- Apply a barrier cream to the skin before handling used oil. Note the following when removing engine oil from skin:
  - Wash your skin thoroughly with soap and water
  - Using a nail brush will help
  - Use special hand cleansers to help clean dirty hands
  - Never use petrol, diesel fuel, or paraffin for washing
- Avoid skin contact with oil soaked clothing
- Don't keep oily rags in pockets
- Wash dirty clothing before re-use
- Throw away oil-soaked shoes

### First Aid - Oil

#### Eyes

In the case of eye contact, flush with water for 15min. If irritation persists, get medical attention.

#### Swallowing

If oil is swallowed do not induce vomiting. Get medical advice.

#### Skin

In the case of excessive skin contact, wash with soap and water.

#### Spillage

Absorb with sand or a locally approved brand of absorbent granules. Scrape up and remove to a chemical disposal area.

#### Fires

⚠ **WARNING** Do not use water to put out an oil fire. This will only spread it because oil floats on water.

Extinguish oil and lubricant fires with carbon dioxide, dry chemical or foam.

## Battery

⚠ **DANGER** Batteries give off an explosive gas. Do not smoke when handling or working on the battery. Keep the battery away from sparks and flames.

Battery electrolyte contains sulphuric acid. It can burn you if it touches your skin or eyes. Wear goggles. Handle the battery carefully to prevent spillage. Keep metallic items (watches, rings, zips etc) away from the battery terminals. Such items could short the terminals and burn you.

Set all switches to off before disconnecting and connecting the battery. When disconnecting the battery, take off the earth (-) lead first.

Re-charge the battery away from the machine, in a well ventilated area. Switch the charging circuit off before connecting or disconnecting the battery. When you have installed the battery in the machine, wait 5min before connecting it up.

When reconnecting, attach the positive (+) lead first.

### Warning Symbols

The following warning symbols may be found on the battery.

**Figure 51.**

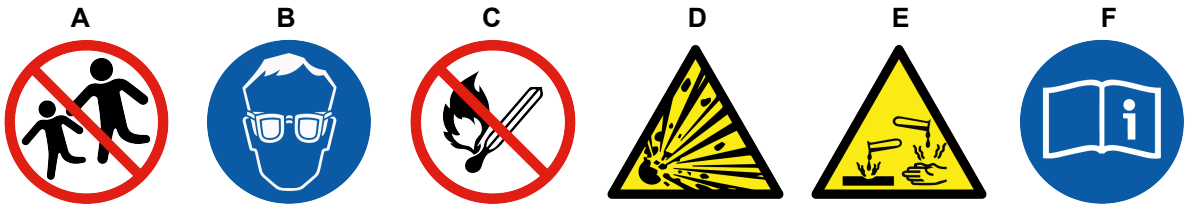


**A** Keep away from children
**B** Shield eyes
**C** No smoking, no naked flames, no sparks
**D** Explosive gas
**E** Corrosive
**F** Note operating instructions

## Disposal

When the battery reaches the end of its usual life it must be removed from the machine and recycled in an approved way in accordance with local environmental regulations. This service is usually operated by battery vendors. Machine users that cannot find a suitable battery recycling facility should contact their JCB dealer for assistance.

## First Aid - Electrolyte

### Eyes

In the case of eye contact, flush with water for 15min. always get medical attention.

### Swallowing

Do not induce vomiting. Drink large quantities of water or milk. Then drink milk of magnesia, beaten egg or vegetable oil. Get medical help.

### Skin

Flush with water, remove affected clothing. Cover burns with a sterile dressing then get medical help.

# Maintenance Schedules

## General

⚠ **WARNING** Maintenance must be done only by suitably qualified and competent persons.

Before doing any maintenance make sure the machine is safe, it must be correctly parked on firm, level ground.

To prevent anyone starting the engine, remove the ignition key. Disconnect the battery (by means of the battery isolator if installed) when you are not using electrical power. If you do not take these precautions you could be killed or injured.

**WARNING** All scheduled and routine maintenance/daily tasks should be conducted with the machine cool. Checking or servicing a hot machine could lead to injury.

A badly maintained machine is a danger to the operator and the people working around the operator. Make sure that the regular maintenance and lubrication tasks listed in the service schedules are done to keep the machine in a safe and efficient working condition.

To ensure the correct functioning of the engine and emissions control system all operation and maintenance must be conducted in accordance with the instructions in this manual. Incorrect operation, maintenance or repair of the engine and emissions control system may lead to reduced product life, loss of performance or malfunctions. It is the machine owner's responsibility to ensure maintenance is conducted properly in accordance with the requirements in this manual.

Apart from the daily tasks, the schedules are based on the machine running hours. Keep a regular check on the hourmeter readings to correctly gauge the service intervals. When there is no hourmeter installed, use the calendar equivalents to determine the service intervals.

Do not use a machine which is due for a service. Make sure any defects found during the regular maintenance checks are corrected immediately.

More frequent checks of engine components than the engine manufacturer recommends do not invalidate emissions warranty.

## How to Use the Maintenance Schedules

The schedules show the service tasks which must be done and their intervals

The 10h and 50h service tasks can be done by the operator. Details of how to do the service tasks are given in this manual and the schedules include a page reference. The remaining service tasks must be done by your JCB dealer.

The services must be done at either the hourly interval or the calendar equivalent, whichever occurs first.

The intervals given in the schedules must not be exceeded. If the machine is operated under severe conditions (high temperature, dust, water, etc.) shorten the intervals.

**Table 13.**

| | |
|---|---|
| ○ | Service task can be completed by a competent operator. Details of how to complete the service task are given in the Operator's Manual. |
| □ | We recommend that a Service Engineer completes the service task. Details of how to complete the service task are given in the Service Manual. |

## Maintenance Intervals

**Table 14.**

| Interval (h) | Calendar Equivalent |
|---|---|
| 10 | Daily |
| 50 | Weekly |
| 500 | Yearly |
| 1000 | Two Years |

# Operator Maintenance Tasks

**Table 15.**

| Component | Task | 10 | 50 |
|---|---|---|---|
| Engine | | | |
| Oil Level | Check | O | O |
| Coolant Quality/ level | Check | O | O |
| Coolant or Oil Leaks | Check | O | O |
| Water Separator | Check for Contamination and Drain | | O |
| All Hoses - Condition | Check | O | O |
| FEAD (Front End Accessory Drive) belt | Check (condition/tension) | | O |
| Air filter dust valve | Check | O | O |
| Fuel pipes and clamp bands | Check | | O |
| Exhaust smoke. | Check | | O |
| Drum, Transmission and steering | | | |
| Drum Scrapers | Clean | O | O |
| Drum scrapers | Check | O | O |
| Drum Distance Spacers / Buffer[(1)] | Check (if necessary) | | O |
| Vibration operation | Check | O | O |
| Sprinkler system operation. | Check | O | O |
| Hydraulics | | | |
| Oil | Check (Level) | O | O |
| Hoses - Damage or Leaks | Check | O | O |
| Rams - Chrome condition, leaks, security | Check | | O |
| Operation all services. | Check | | O |
| Brakes | | | |
| Drive brake-operation | Check | O | O |
| Park brake -operation | Check | O | O |
| Electrics | | | |
| Wiring for damage/routing | Check (Condition) | | O |
| Battery Mounting | Check (Condition) | | O |
| Battery Terminals for Condition and Tightness | Check (Condition) | | O |
| All electrical equipments operation (e.g. warning lights, beacon, alarm, horn etc.) | Check | O | O |
| Engine stop | Check | O | O |
| Bodywork and Cab | | | |
| Safety Decals/Notes | Check | O | O |
| Cab Isolation Mounts | Check | | O |
| ROPS (Roll-Over Protective Structure) | Check (Condition) | O | O |
| Seat Belt - Condition, operation and security (If fitted) | Check | O | O |
| Machine Generally including paintwork | Check for Damage and Clean | O | O |

| Component | Task | 10 | 50 |
|---|---|---|---|
| Operator's seat safety switch (if installed) | Check | O | O |
| Neutral start operation | Check | O | O |

*(1) Check the tightness of the bolts/screws every day for the first week (when machine is new), then thereafter every 500h.*

## Service Engineer Maintenance Tasks

Start the engine to do these maintenance tasks. Engine can be started, if the drive lever is in park brake position. It is not mandatory to occupy the operator seat before starting the engine.

**Table 16.**

| Component | Task | 100 (5) | 500 | 1,000 | 2,000 |
|---|---|---|---|---|---|
| Engine | | | | | |
| Oil Level | Check | ☐ | ☐ | ☐ | ☐ |
| Oil and Filter | Change | | ☐ | ☐ | ☐ |
| Coolant Quality/ level | Check | ☐ | ☐ | ☐ | ☐ |
| Coolant or Oil Leaks | Check | ☐ | ☐ | ☐ | ☐ |
| Coolant (inorganic)(6) | Drain and Fill | | | | ☐ |
| Coolant OAT (Organic Acid Technology)(6, 7) | Drain and Fill | | | | |
| Water Separator | Check for Contamination and Drain | ☐ | ☐ | ☐ | ☐ |
| Fuel filter element | Change | | ☐ | ☐ | ☐ |
| Fuel pre filter (inline) | Change | | ☐ | ☐ | ☐ |
| Fuel tank and filler | Drain/Clean | | ☐ | ☐ | ☐ |
| All Hoses - Condition | Check | | ☐ | ☐ | ☐ |
| Radiator | Clean | | ☐ | ☐ | ☐ |
| FEAD (Front End Accessory Drive) belt | Check (condition/tension) | | ☐ | ☐ | ☐ |
| FEAD belt | Change | | | | ☐ |
| Air Cleaner Outer Element(3) | Change | | ☐ | ☐ | ☐ |
| Air Cleaner Inner Element | Change | | | ☐ | ☐ |
| Air filter dust valve | Check | ☐ | ☐ | ☐ | ☐ |
| Fuel pipes and clamp bands | Check | | ☐ | ☐ | ☐ |
| Fuel pipes and clamp bands(4) | Change | | | | ☐ |
| Turbo charger(4) | Check (condition) | | | | ☐ |
| Injection Pump(4) | Check (condition) | | | | ☐ |
| Injector pressure(4) | Check | | | ☐ | ☐ |
| Idle Speed | Check and Adjust | | ☐ | ☐ | ☐ |
| Maximum No load condition. | Check | ☐ | ☐ | ☐ | ☐ |
| Exhaust smoke. | Check | ☐ | ☐ | ☐ | ☐ |
| Exhaust system security | Check | ☐ | ☐ | ☐ | ☐ |
| Air Inlet system security | Check | ☐ | ☐ | ☐ | ☐ |

| Component | Task | 100 [5] | 500 | 1,000 | 2,000 |
|---|---|---|---|---|---|
| Engine Mode Switch | Check | ☐ | ☐ | ☐ | ☐ |
| Drum, Transmission and steering | | | | | |
| Drum Scrapers | Clean | | ☐ | ☐ | ☐ |
| Drum scrapers | Check | ☐ | ☐ | ☐ | ☐ |
| Drum Rubber Buffers | Check | | ☐ | ☐ | ☐ |
| Drum distance spacers / Buffer fastners | Check | ☐ | ☐ | ☐ | ☐ |
| Forward/ Reverse operation | Check | ☐ | ☐ | ☐ | ☐ |
| Vibration operation | Check | ☐ | ☐ | ☐ | ☐ |
| Sprinkler system operation. | Check | ☐ | ☐ | ☐ | ☐ |
| Steer circuit pressure | Check | ☐ | ☐ | ☐ | ☐ |
| Articulation joint | Check | | ☐ | ☐ | ☐ |
| Hydraulics | | | | | |
| Oil | Check (Level) | | ☐ | ☐ | ☐ |
| Oil | Change | | | ☐ | ☐ |
| Oil reservoir | Clean | | | | ☐ |
| Oil filter[8] | Replace | | ☐ | ☐ | ☐ |
| Hoses - Damage or Leaks | Check | | ☐ | ☐ | ☐ |
| Rams - Chrome condition, leaks, security | Check | | ☐ | ☐ | ☐ |
| Charge pressure | Check | ☐ | ☐ | ☐ | ☐ |
| Operation all services. | Check | ☐ | ☐ | ☐ | ☐ |
| Brakes | | | | | |
| Drive brake-operation | Check | ☐ | ☐ | ☐ | ☐ |
| Park brake -operation | Check | ☐ | ☐ | ☐ | ☐ |
| Electrics | | | | | |
| Battery charge indicator | Check | | ☐ | ☐ | ☐ |
| Wiring for damage/routing | Check (Condition) | | ☐ | ☐ | ☐ |
| Battery mounting | Check (Condition) | | ☐ | ☐ | ☐ |
| Battery Terminals for Condition and Tightness | Check (Condition) | | ☐ | ☐ | ☐ |
| Battery vent holes | Clean | | ☐ | ☐ | ☐ |
| Starter Motor[2] | Check | | | | |
| Alternator- Output[2] | Check | | | | |
| All electrical equipments operation(e.g. warning lights, beacon, alarm, horn etc | Check | ☐ | ☐ | ☐ | ☐ |
| Engine stop | Check | ☐ | ☐ | ☐ | ☐ |
| Bodywork and Cab | | | | | |
| Safety Decals/Notes | Check | | ☐ | ☐ | ☐ |
| Cab Isolation Mounts | Check | | ☐ | ☐ | ☐ |
| ROPS (Roll-Over Protective Structure) | Check (Condition) | | ☐ | ☐ | ☐ |
| Seat Belt - Condition, operation and security (If fitted) | Check | | ☐ | ☐ | ☐ |

| Component | Task | 100 (5) | 500 | 1,000 | 2,000 |
|---|---|---|---|---|---|
| Machine Generally including paintwork | Check for Damage and Clean | | ☐ | ☐ | ☐ |
| Operator's seat safety switch (if installed) | Check | ☐ | ☐ | ☐ | ☐ |
| Neutral start operation | Check | ☐ | ☐ | ☐ | ☐ |

*(1) Check the tightness of the bolts/screws every day for the first week (when machine is new), then thereafter every 500h.*
*(2) Every 5,000h*
*(3) If operating in dusty adverse working environments, do these jobs more frequently.*
*(4) These jobs must be done by a qualified engineer.*
*(5) First 100hrs service to be completed by your JCB dealer.*
*(6) Check which coolant type is installed in the machine before topping up the coolant. Mixing of different coolant types is likely to impair corrosion inhibiting performance and may result in invalidation of the warranty offered by JCB. In the event of mixing or if the coolant type is to be changed, the coolant circuit should be completely drained and flushed with clean water before re-filling with fresh coolant.*
*(7) Replace every 4000h.*
*(8) Change at recommended interval - or when the warning light is ON*

# Maintenance Positions

## General

1. Park the machine on solid, level ground.
2. Install the articulation lock.
3. Move the drive lever to the neutral position.
4. Stop the engine and remove the ignition key.
5. Wait for the specified time to dissipate any residual hydraulic pressure.
   Duration: 30s
6. Disconnect the battery to prevent accidental operation of the machine.
7. If necessary, put blocks against the two sides of the drums before you get below the machine. Refer to Figure 52.
8. If you wish to arc weld the machine disconnect the alternator and electronic control units (if installed).

**Figure 52.**

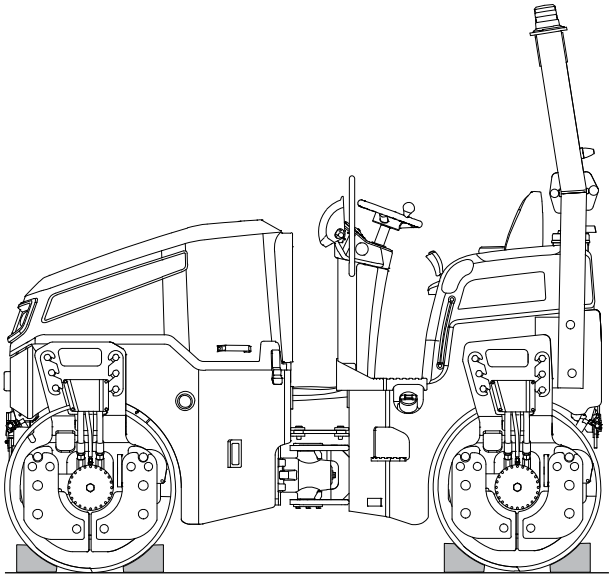

# Service Points

## General

**Figure 53.**

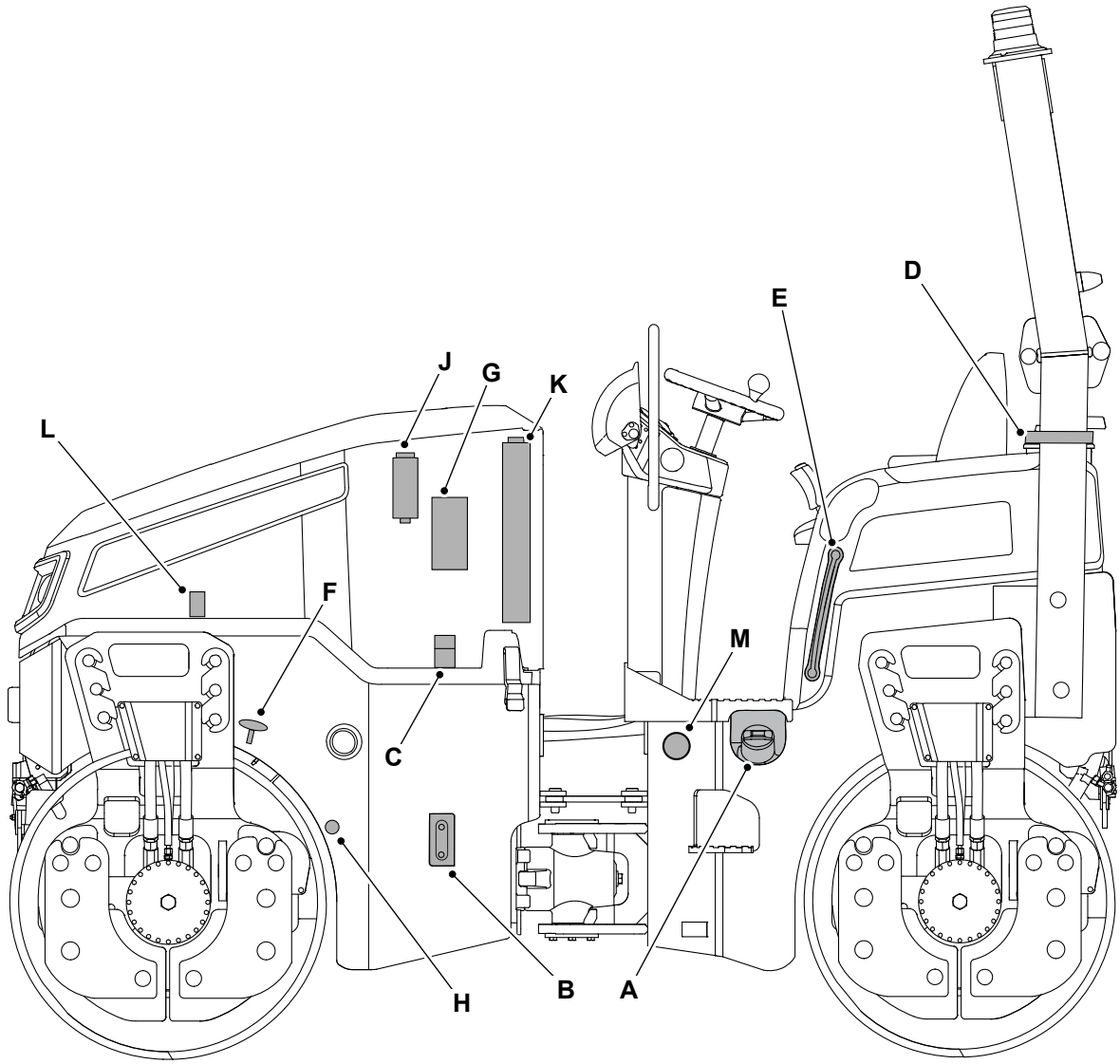


**A** Diesel fuel filler cap
**B** Hydraulic oil level indicator
**C** Hydraulic oil filler cap
**D** Water tank filler cap
**E** Water level indicator
**F** Engine oil dipstick
**G** Coolant recovery bottle
**H** Engine oil drain
**J** Water separator/fuel filter
**K** Radiator
**L** Primary fuses
**M** Fuel filter (inline)

**Figure 54.**

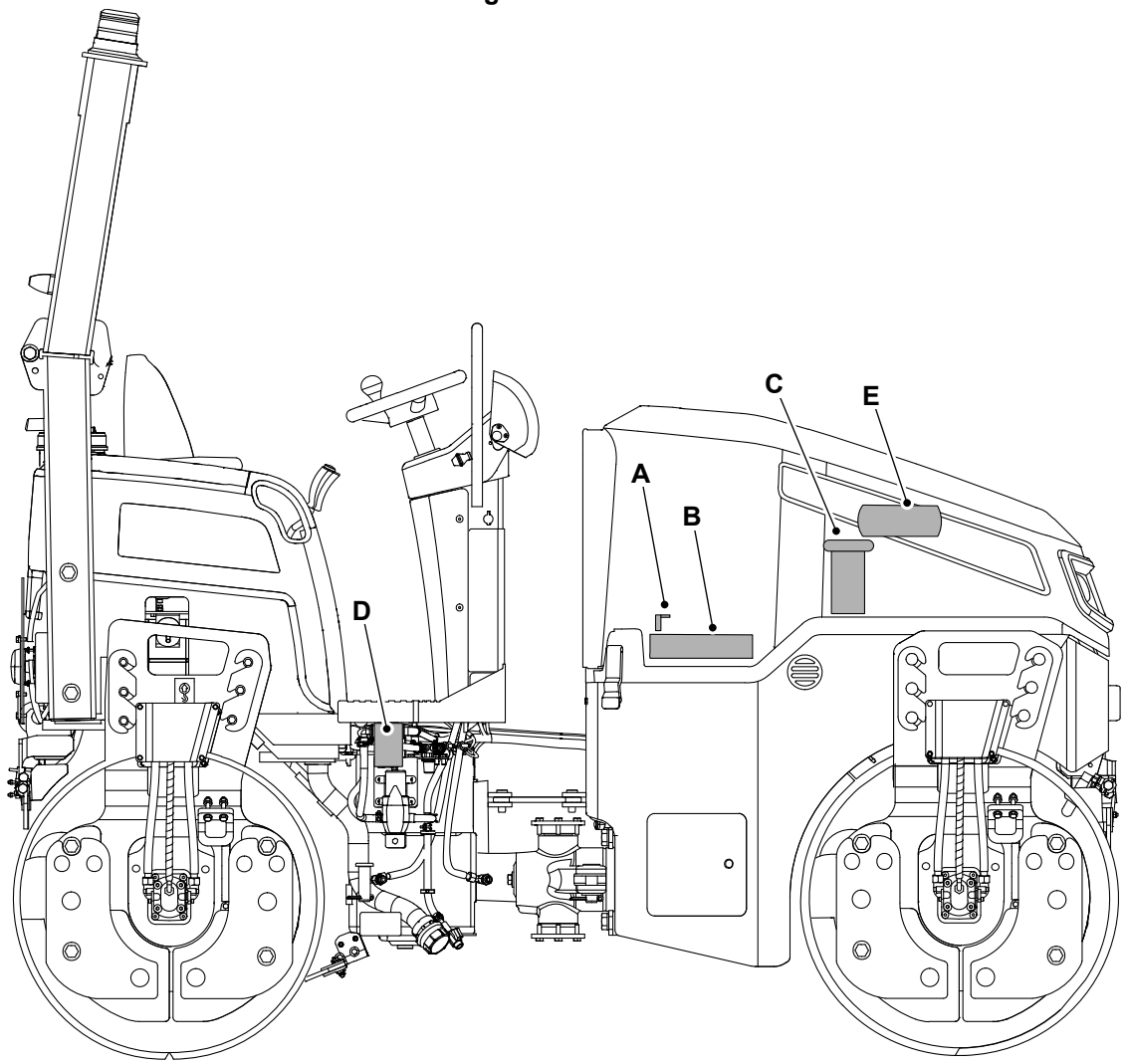


**A** Battery Isolator
**B** Battery
**C** Hydraulic filter
**D** Water filter
**E** Air Filter

# Access Apertures

## Engine Compartment Cover

Most of the service points can be access through the engine compartment cover.

### Open

1. Make the machine safe.
2. Park the machine on firm level ground.
3. Apply the parking brake (if installed).
4. Engage the articulation lock.
5. Stop the engine and turn the ignition key to the off position.
6. Remove the ignition key.
7. Unlock the latch connected to down left and right side of engine cover. Refer to Figure 55.
8. Use the handle to open the engine cover.
9. Lift the bonnet slightly and the gas strut will support the opening of the bonnet.

**Figure 55.**

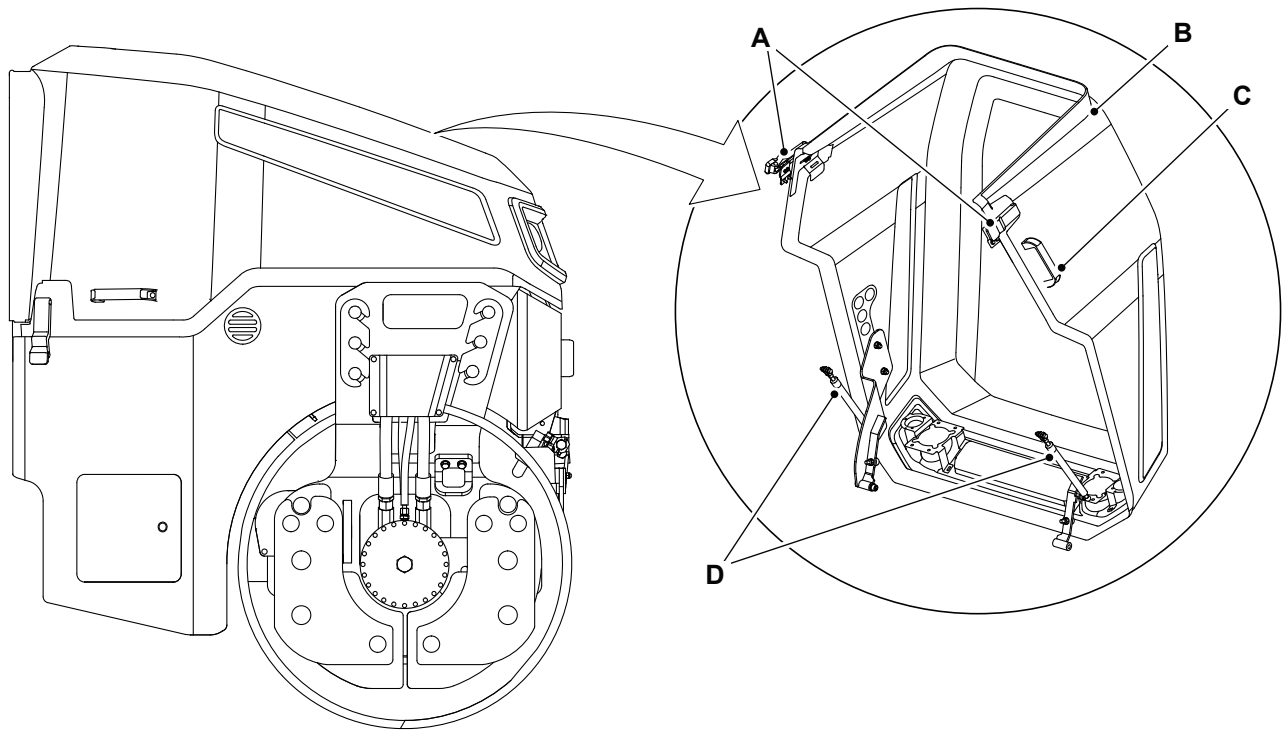


**A** Latch
**B** Bonnet
**C** Handle
**D** Gas Strut

### Close

1. Pull down the bonnet into the stowage position.
2. Make sure that the cover is closed correctly.
3. Lock the latch connected to down left and right side of engine cover. Refer to Figure 55.

# Tools

## General

All tools must be kept in the tool bag when not in use. Your tool bag contains allen keys, tommy bar, and spanner.

Following tools are recommended for the routine maintenance:

Tommy bar (size 1/2") - It is required for ROPS (Roll-Over Protective Structure) folding and unfolding operation.
Refer to: Transporting the Product (Page 74).

Double end spanner (size 12-13) - It is required for the adjustment of scraper bars.
Refer to: Check (Condition) (Page 126).

Allen key (size 6mm and 8mm) - It is required to release the brake manually for towing operation.
Refer to: Retrieval (Page 68).

Double end spanner (size 30-32) - It is required for the adjustment of center joint.
Refer to: Articulation Lock (Page 45).

# Body and Framework

## General

### Check (Condition)

1. Make sure that all of the guards and protective devices are in position, secured by their locking devices and free from damage.
2. Inspect all of the steelwork for damage. Include the following:
   2.1. Examine all of the pivot point welds.
   2.2. Examine the condition of all the pivot pins.
   2.3. Check that the pivot pins are correctly in position and secured by their locking devices.
3. Check the steps and handrails are undamaged and correctly attached.
4. Check that the lamp lenses are undamaged.
5. Check that all of the safety and instructional labels are undamaged and in position. Install new labels where necessary.
6. Note any damaged paintwork for future repair.
7. Inspect the machine for broken or loose fasteners.

# Operator Station

## Operator Protective Structure

### Check (Condition)

⚠ **WARNING** You could be killed or seriously injured if you operate a machine with a damaged or missing ROPS/FOPS/FOGS. If the ROPS/FOPS/FOGS has been in an accident, do not use the machine until the structure has been renewed. Modifications and repairs that are not approved by the manufacturer may be dangerous and will invalidate the ROPS/FOPS/FOGS certification.

A failure to adhere to these precautions can cause death or injury to the operator. For assistance, contact your JCB dealer.

1. Make the machine safe.
   Refer to: Maintenance Positions (Page 99).
2. Check the structure for damage.
3. Make sure that all of the ROPS mounting bolts are undamaged and in position.
4. Make sure that the ROPS mounting bolts are tightened to the correct torque setting.
   Refer to: Torque Values (Page 152).

## Seat

### Check (Condition)

1. Check that the seat adjustments operate correctly.
2. Check the seat is undamaged.
3. Check the seat mounting bolts are undamaged, correctly installed and tight.
4. Make sure the seat is clear from unwanted materials and hazards at all times.

## Seat Belt

### Check (Condition)

⚠ **WARNING** When a seat belt is checked for condition if it is damaged, if the fabric is worn, or if the machine has been in an accident, replace it with a complete seat belt assembly.

**WARNING** The seat belt life can be reduced by many factors such as severe working conditions, high usage, humidity, dust, chemicals and atmospheric conditions. Where the seat belt is exposed to any of these conditions it should be inspected more frequently than that specified in the maintenance schedules.

**WARNING** If the seat belt does not 'lock' when you check if the seat belt is operating correctly, do not drive the machine. Get the seat belt repaired or replaced immediately.

1. Make sure the seat belt can be adjusted.
2. Examine the seat belt for signs of fraying and stretching.
3. Check that the stitching is not loose or damaged.
4. Check that the belt mounting bolts are undamaged, correctly installed and tight.
5. Check that the buckle assembly is undamaged and operates correctly.

# Controls

## Check (Operation)

Check the operation of the non-hydraulic and non-electrical operator station controls.

# Safety Equipment

## Check (Operation)

### Neutral Start

1. Enter into the machine.
2. Wear the seat belt.
3. Put the drive lever in park brake position and start the engine. If the engine fail to start, contact your local JCB dealer to rectify the faults.
4. Put the drive lever in forward or reverse position and start the engine. If the engine start, contact your local JCB dealer to rectify the faults.

### Operator Seat Switch

1. Enter into the machine.
2. Sit on the operator seat.
3. Put the drive lever in park brake and start the engine.
4. Operator seat switch icon on the instrument panel should be extinguished.
5. If the operator seat switch still illuminate, contact your local JCB dealer to rectify the faults.
6. If the drive lever is not in park brake position and operator seat is not occupied then the engine will cut off with in specified time.

   Duration: 2s

### Emergency Stop Button

Press the emergency stop switch on the steering column and the engine will be stopped. If any controls are still functional, contact your local JCB dealer to rectify the faults immediately. Do not use the machine until the fault is rectified.

# Engine

## General

### Check (Condition)

Start the engine and check for:

- Excessive smoke
- Excessive vibration
- Excessive noise
- Overheating
- Performance
- Unusual smells.

## Oil

### Check (Leaks)

Before you start the machine, do a check for oil leaks:

1. Make the machine safe.
   Refer to: Maintenance Positions (Page 99).
2. Get access to the engine compartment (if applicable).
   Refer to: Access Apertures (Page 102).
3. Check the engine and the area below for oil leaks.
4. Close the engine cover (if applicable).
5. If necessary, contact your JCB dealer.

### Check (Level)

⚠ **WARNING** Never check the oil level or add oil with the engine running. Be careful of hot lubricating oil. Danger of scalding.

**Notice:** Do not exceed the maximum level of engine oil in the sump. If the maximum is exceeded, the excess must be drained to the correct level. An excess of engine oil could cause the engine speed to increase rapidly without control.

1. Make the product safe.
   Refer to: Maintenance Positions (Page 99).
2. Wait for the oil to drain back into the engine sump before you take a reading. If not, a false low reading may be recorded which can cause the engine to be overfilled.
3. Get access to the engine compartment (if applicable).
   Refer to: Access Apertures (Page 102).
4. Remove and clean the dipstick.
   Refer to: Service Points (Page 100).
5. Replace the dipstick.
6. Remove the dipstick.
7. Check the oil level. The oil should be between the minimum and maximum marks on the dipstick.
8. If necessary, add more oil:
   8.1. Remove the filler cap.

Refer to: Service Points (Page 100).

8.2. Add the recommended oil slowly through the filler point
Refer to: Fluids, Lubricants and Capacities (Page 149).

8.3. Replace the dipstick.

8.4. Remove the dipstick.

8.5. Check the oil level, if necessary add more oil.

8.6. Replace the dipstick

8.7. Replace the filler cap.

9. Close and secure the engine cover (if applicable).

## Replace

⚠ **WARNING** Before draining the oil make sure you loosen the oil filler plug or the breather (if installed), and wait until the internal pressure is completely released. Remove the oil draining plug and drain oil only when the pressure is completely released.

**CAUTION** Keep your face away from the drain hole when removing the drain plug.

**CAUTION** It is illegal to pollute drains, sewers or the ground. Clean up all spilt fluids and/or lubricants.

Used fluids and/or lubricants, filters and contaminated materials must be disposed of in accordance with local regulations. Use authorised waste disposal sites.

## Remote Oil Drain

Remote oil drain plug is located on the left hand side of the front frame. Refer to Figure 56.

**Figure 56.**

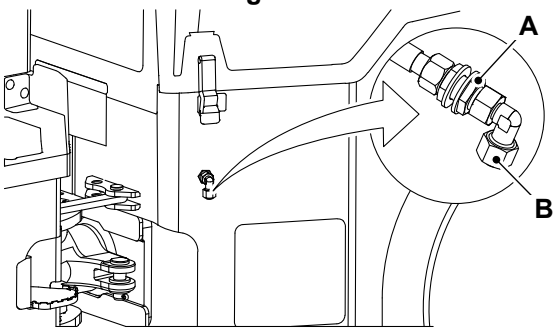


**A** Drain fitting **B** Drain plug

1. Make the machine safe.
Refer to: Maintenance Positions (Page 99).

2. Put a container of a specific capacity below the drain fitting.
Volume: 8.9L

3. Remove the drain plug from the drain fitting and allow the oil to drain into the container. Refer to Figure 56.

4. Clean and install the drain plug.

## Replace the Oil Filter

**Figure 57.**

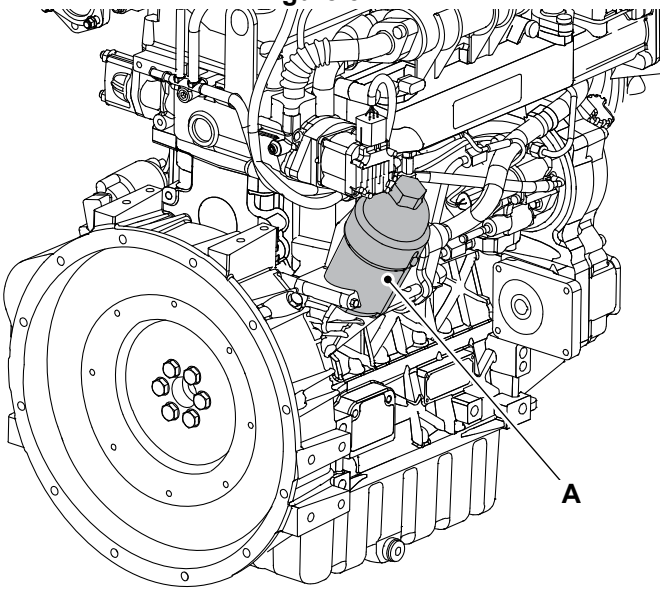


**A** Engine oil filter

1. Make the machine safe.
2. Get the access to the engine compartment.
   Refer to: Engine Compartment Cover (Page 102).
3. Loosen the element holder cap. Refer to Figure 58.
4. Remove the cap and the oil filter element from the oil filter support.
5. Remove the element from the cap and discard.

**Figure 58.**

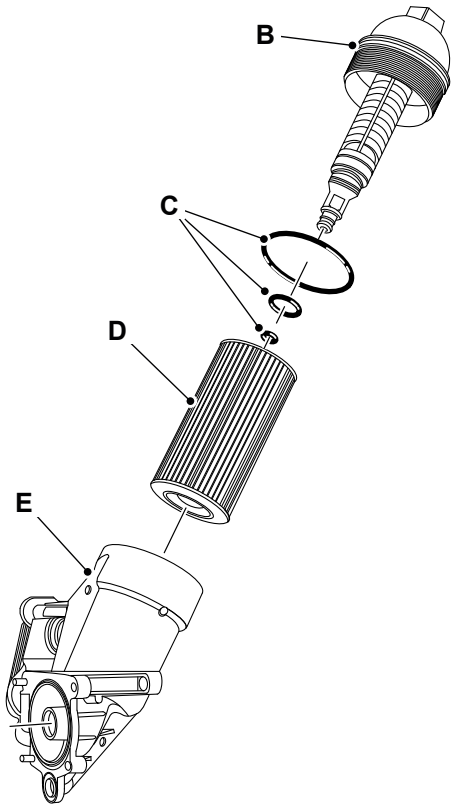


**B** Element holder cap
**C** Seals
**D** Element
**E** Oil filter support

6. Remove and replace the seals.
7. Apply clean oil on the seals.
8. Put the new element on the cap.
9. Install the cap on the oil filter support.
10. Tighten the cap to the specified torque value.
    Torque: 25N·m
11. Through the top filler point, fill the engine with the recommended oil to the MAX mark on the dipstick.
12. Install the oil filler cap.
13. Wipe off the spilled oil.
14. Operate the engine until the oil pressure low warning light has extinguished.
15. Turn OFF the engine and allow the it to cool.
16. Check the oil level again, and if necessary top up with recommended clean engine oil.
17. Close the engine cover.

# Front End Accessory Drive (FEAD) Belt

## Check (Condition)

⚠ **WARNING** Do not try to turn the engine by pulling the fan or fan belt. This could cause injury or premature component failure.

**CAUTION** Make sure the engine cannot be started. Disconnect the battery before doing this job, otherwise you could be injured.

**Figure 59.**

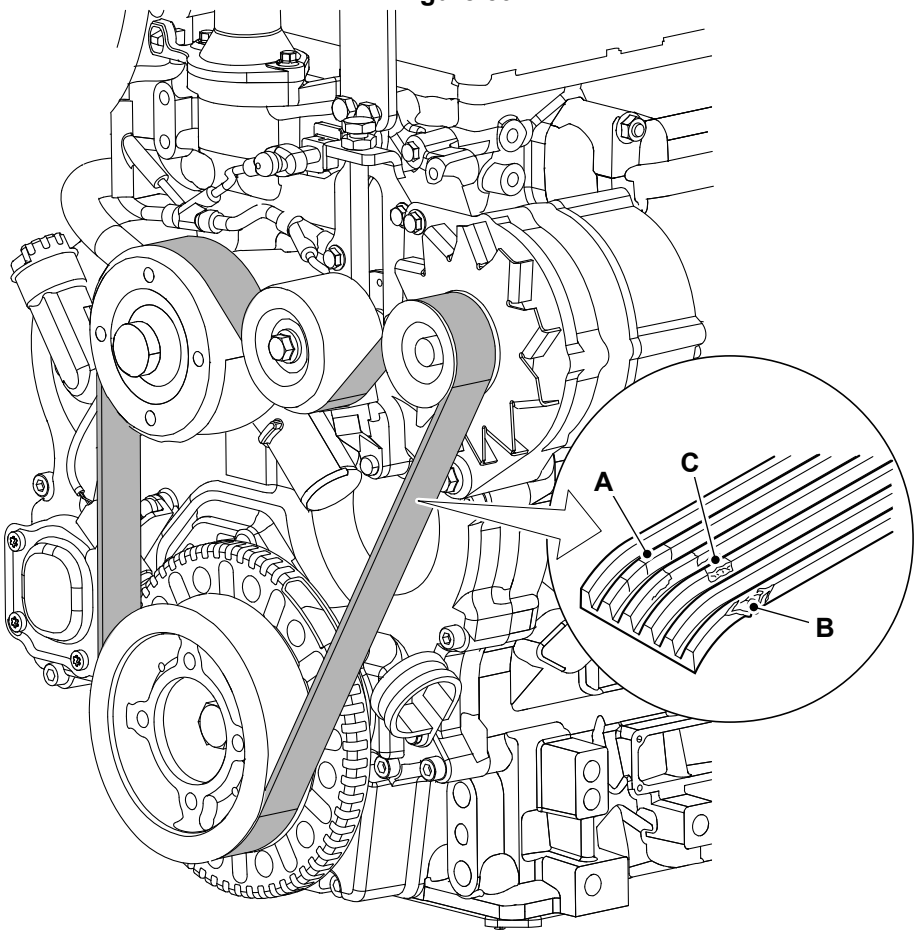


**A** Cracks
**B** Fraying
**C** Missing pieces

1. Make the machine safe.
   Refer to: Maintenance Positions (Page 99).
2. Inspect the belt for cracks, fraying or missing pieces.
3. If necessary, install the new drive belt.

### Replace

Figure 60.

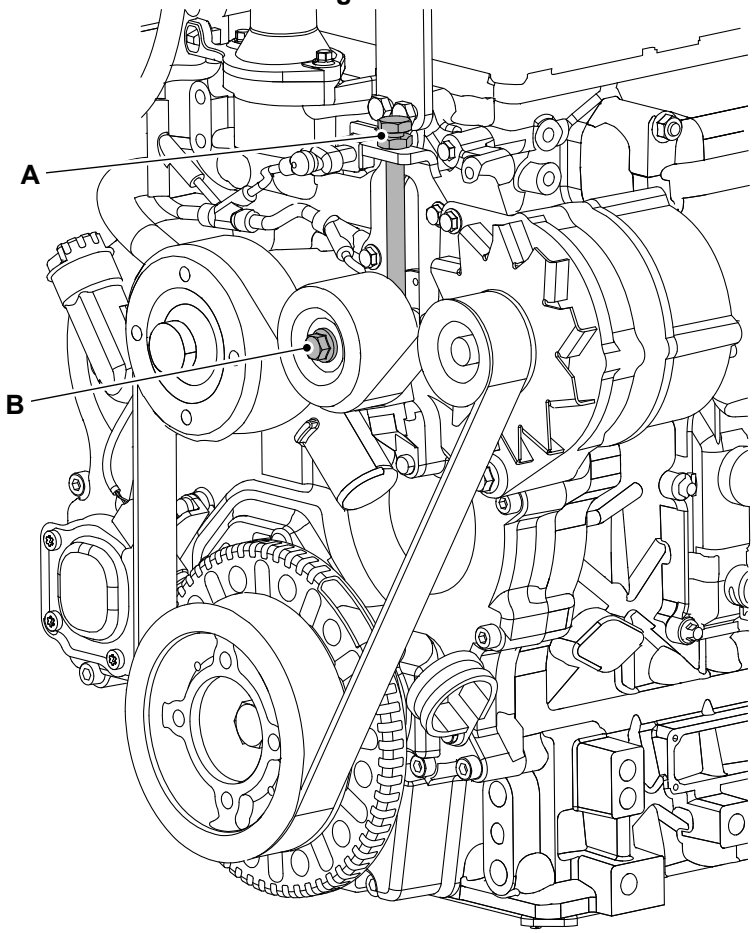


**A** Drive belt adjustment bolt **B** Pulley bolt

1. Make the machine safe.
2. Open the engine compartment cover.
3. Loosen the drive belt adjustment bolt.
4. Loosen the pulley bolt.
5. Install the new drive belt around the pulleys.
6. Tighten the pulley bolt.
7. Tighten the drive belt adjustment bolt.

## Exhaust

### Check (Condition)

Check that there are no exhaust system components missing.

Check that none of the components are excessively corroded.

Check that there are no leaks in the exhaust system.

Check that the exhaust system is secure.

Check that the exhaust system hoses, piping, clamps are secured properly and are not damaged or leaking.

Check that the exhaust system electrical components, wiring harness, sensors and connectors are secured properly and are not damaged.

# Air Filter

## General

### Check (Condition)

⚠ **Notice:** Do not modify or install non JCB approved components to the engine induction system, otherwise the engine emissions will be compromised.

1. Make the machine safe.
2. Get access to induction system.
3. Check the system hoses for:
   3.1. Condition.
   3.2. Damage.
   3.3. Security.
4. Replace the system hoses if necessary.

## Outer Element

### Replace

⚠ **Notice:** The inner element of the engine air filter must be replaced with a new one. Do not attempt to clean or wash the old element.

**Notice:** Do not clean the air filter elements, they must be replaced at the recommended interval or earlier in arduous environments

**Notice:** Do not run the engine with the air filter element removed.

**Figure 61.**

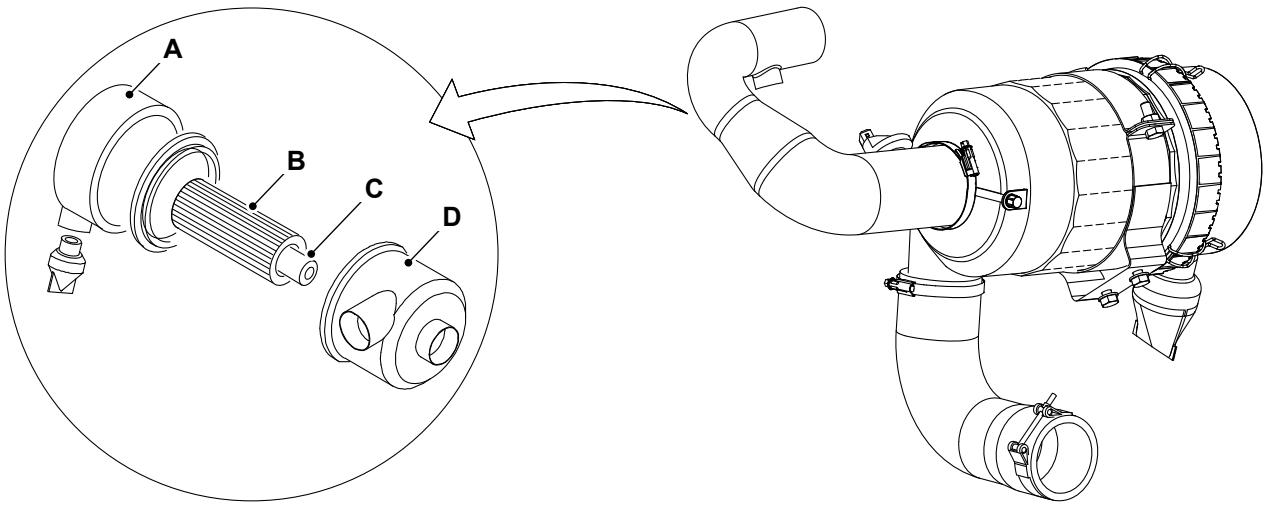


**A** Cover
**B** Outer element
**C** Inner element
**D** Canister

A new inner element must be fitted at least every second time the outer element is changed. As a reminder, mark the inner element with a felt tipped pen each time the outer element is changed.

1. Make the machine safe.
   Refer to: Service Manual (Machine) – CT380, CT430 (STV) (9833/0800) Safety.
2. Open the engine cover.

3. Clean area around the air filter.
4. Remove the air filter cover.
5. Remove outer element.
6. If necessary, remove the inner element.
   6.1. You must not tap or knock the element.
7. Clean the inside of cover and canister.
8. Carefully insert the new inner element into the canister.
9. Make sure it seats correctly and check the seal is fully seated.
10. Insert a new outer element into the canister, check seal is fully seated.
11. Install the cover with dust valve at the bottom and secure it.
12. Check all hoses for condition and tightness.
    12.1. Never try to replace hose with any other pipe/ hose. The machine can catch fire if incorrect parts are fitted. Contact JCB service dealer for details.

# Dust Valve

## Check (Condition)

- Check the dust valve for rips/tears.
- Check there are no obstructions.
- Check that the dust valve is free of dirt and dust.
- Check that the dust valve securely attached to the air filter housing.

# Fuel System

## General

### Bleed

⚠ **WARNING** Do not open the high pressure fuel system with the engine running. Engine operation causes high fuel pressure. High pressure fuel spray can cause serious injury or death.

It is not required to bleed fuel system on these machines. There is a separate air bleed port that vents back to tank when the system is being primed.

### Check (Leaks)

1. Make the machine safe.
2. Get access to the engine compartment.
   Refer to: Access Apertures (Page 102).
3. Check the engine compartment, fuel lines and the area below for leaks.
4. Start the engine.
5. While the engine is running check the engine compartment, fuel lines and the area below for leaks.
6. If necessary, contact your JCB dealer.

## Tank

### Drain

### Draining Fuel Tank

1. Make the machine safe.
   Refer to: Maintenance Positions (Page 99).
2. Remove the fuel cap on the fuel tank. Refer to Figure 62.
3. Put a suitable container below the drain plug on the right hand side of the rear chassis. Do not confuse with the hydraulic tank drain plug. Refer to Figure 62.

**Figure 62.**

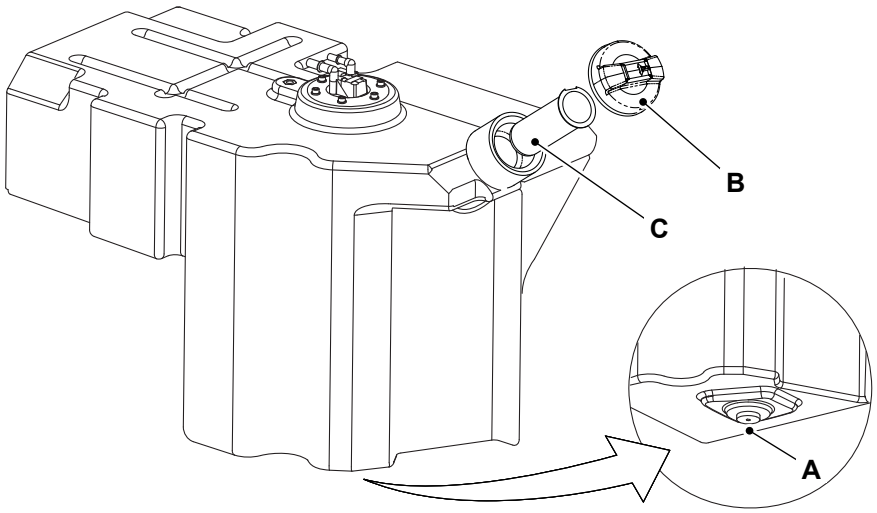


**A** Drain plug
**B** Fuel cap
**C** Filler screen

4. Remove the drain plugs and drain the fuel from the fuel tank.
5. Flush the fuel tank with diesel fuel.
6. Install the drain plugs.
7. Remove the filler screen, clean the filler screen with diesel fuel. Refer to Figure 62.
8. Install the filler screen.
9. Fill the fuel tank and check for leaks.
10. Install the fuel cap on the fuel tank.

# Pre-Filter Element

## Replace

1. Make the machine safe.
   Refer to: Maintenance Positions (Page 99).
2. Open the engine compartment cover to get access to the pre-filter. Refer to Figure 63.
   Refer to: Access Apertures (Page 102).
3. Locate the pre-filter installed near to the hydraulic tank filler.
4. Clean the outer surface of the pre-filter and the area around the hoses.
5. Place a suitable container below the to collect residual fuel, if any.
6. Loosen the hose clamps and remove the hoses from both ends of the pre-filter.
7. Remove the setscrew and washer from the p-clip.
8. Remove the pre-filter from the pre-filter mount bracket.
9. Install the new pre-filter. Refer to Figure 63.
   9.1. Make sure that the pre-filter is installed in the correct orientation. There is a arrow on the body of the pre-filter to indicate the direction of flow.
10. Install the setscrew and washer on the p-clip.
    10.1. Tighten the setscrew to the correct torque value.
11. Install the hoses along with the hose clamps on the pre-filter.
    11.1. Tighten the hose clamps and make sure not to overtighten the hose clamps.
12. Clean the spilled fuel, if any.
13. Run the engine and make sure that there are no fuel leakages.

Figure 63.

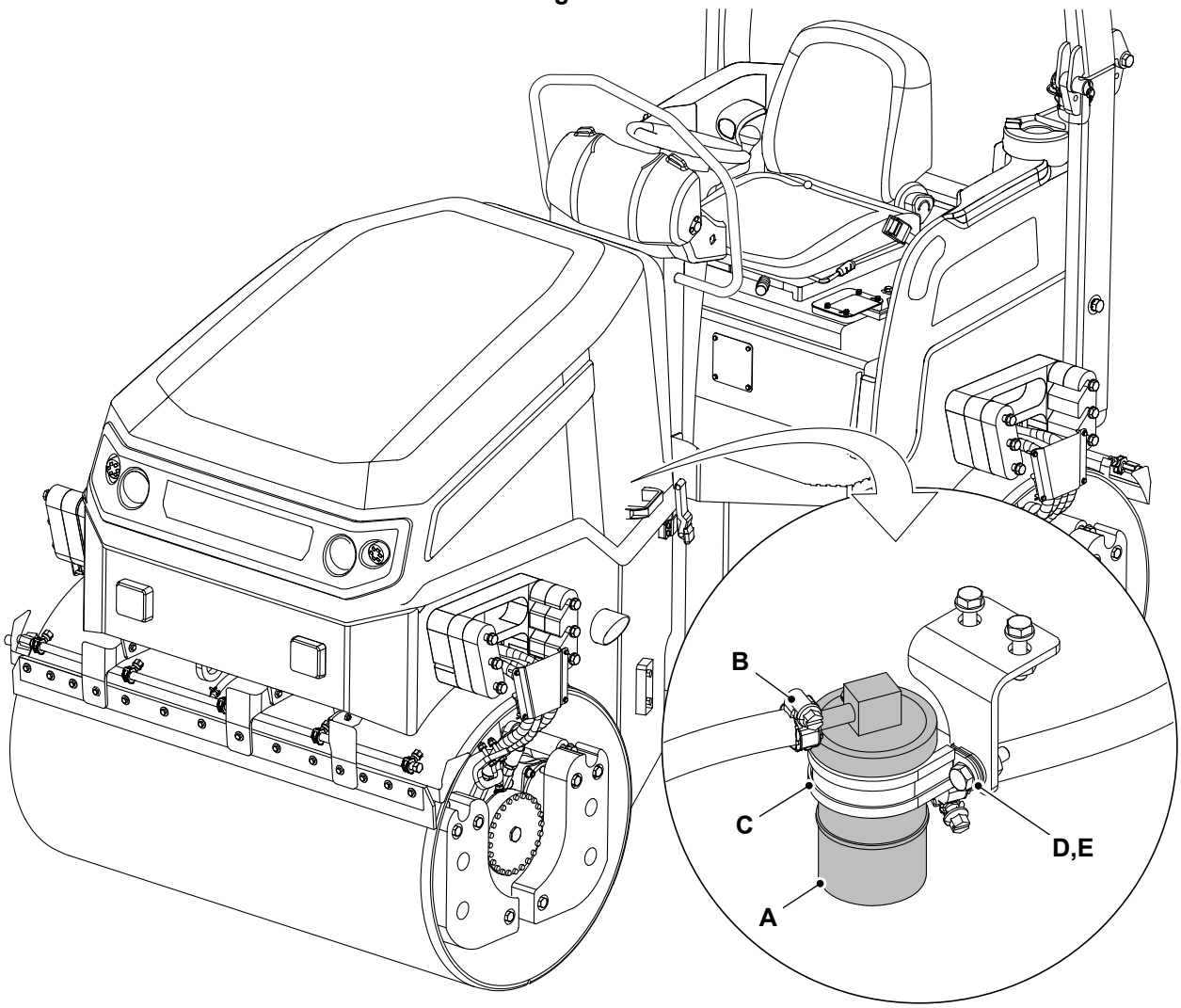


**A** Pre-filter
**B** Clamp
**C** P-clip
**D** Setscrew
**E** Washer

14. Close the engine compartment cover.

# Fuel Filter

## Replace

1. Make the machine safe.
   Refer to: Maintenance Positions (Page 99).
2. Open the engine cover to get access to the fuel filter.
3. Clean the outside of the filter housing and around the filter head.
4. Place a suitable container to catch any fuel.
5. Remove the drain.
6. Remove the filter element. Refer to Figure 64.
7. Clean around the filter base seal area.

8. Apply a thin film of oil on the gasket surface of the new filter element.
9. Do not fill the new filter element with fuel.
10. Install the filter element onto the filter head until the gasket contacts the head. Hand tighten the filter an additional one half to three quarter of a turn.
11. Run the engine and make sure there are no fuel leaks.

**Figure 64.**

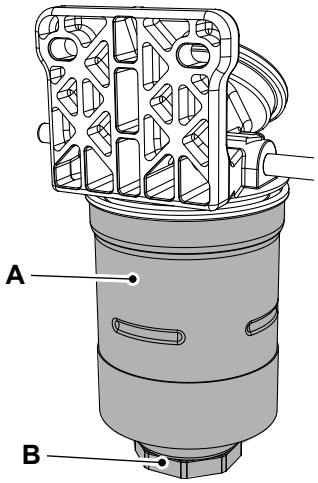


**A** Filter element **B** Drain

# Cooling System

## General

### Check (Leaks)

⚠ **CAUTION** The cooling system is hot when the machine is running. Allow the machine to cool down to perform the service tasks.

Before you start the machine, inspect the system for leaks:

1. Make the machine safe.
   Refer to: Maintenance Positions (Page 99).
2. Get access to the cooling pack.
   Refer to: Access Apertures (Page 102).
3. Check the cooling system for leaks.
4. If necessary, contact your JCB dealer.

## Coolant

### Check (Condition)

Refer to: Coolant (Page 151).

### Check (Level)

⚠ **CAUTION** The cooling system is pressurised when the coolant is hot. If you remove the cap, hot coolant can spray out and burn you. Make sure that the engine is cool before you work on the cooling system.

1. Make the machine safe.
2. Let the engine cool.
3. Get access to the top of the radiator.
   Refer to: Service Points (Page 100).
4. Check the coolant level in the coolant recovery bottle.
   4.1. Carefully loosen the radiator cap and let the pressure release from the system.
   Refer to: Service Points (Page 100).
   4.2. Remove the radiator cap.
   4.3. Add the recommended coolant up to the maximum mark.
   Refer to: Fluids, Lubricants and Capacities (Page 149).
   4.4. Install the radiator cap.
5. Start the engine and run the engine up to operating temperature.
6. Stop the engine.
7. Remove the ignition key.
8. Check for leaks.

## Replace

For: CT380 [STV PUN], CT430 [STV PUN] ..... Page 122
For: CT380 [T4F PUN], CT430 [T4F PUN] ..... Page 123

## (For: CT380 [STV PUN], CT430 [STV PUN])

⚠ **CAUTION** The cooling system is pressurised when the coolant is hot. If you remove the cap, hot coolant can spray out and burn you. Make sure that the engine is cool before you work on the cooling system.

**Figure 65.**

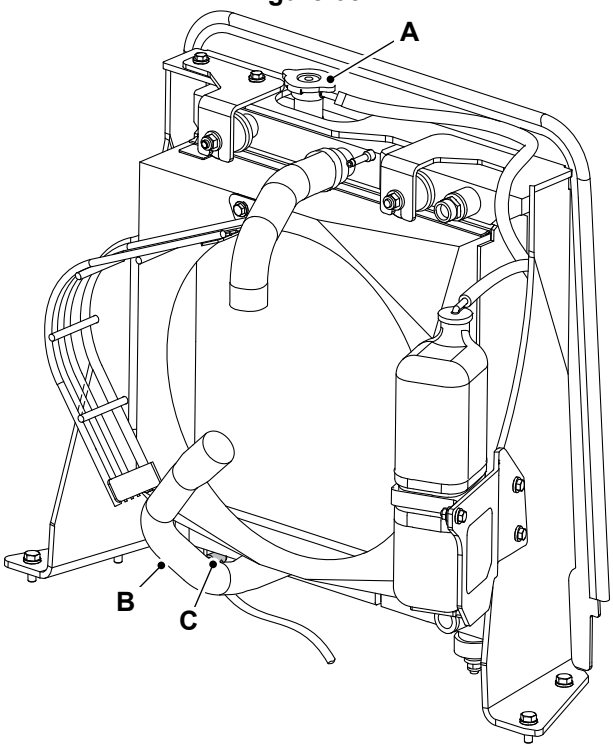


**A** Radiator cap
**B** Bottom radiator hose
**C** Drain valve

1. Make the machine safe.
   Refer to: Maintenance Positions (Page 99).
2. Open the engine compartment cover.
3. Carefully remove the radiator cap. Let any pressure escape before removing the cap. Refer to Figure 65.
4. Put the suitable size of container below the drain valve or bottom radiator hose.
5. Open the drain valve or remove the bottom radiator hose to drain the coolant. Refer to Figure 65.
6. Flush the system with clean water. After flushing, close the drain valve and install the radiator bottom hose.
7. Use the necessary mix of clean, soft water and antifreeze. Fill the cooling system.
   Refer to: Fluids, Lubricants and Capacities (Page 149).
   7.1. Do not fill the machine at more than 5 litres per minute. If the fill rate is any higher than this there is a possibility of air trapped in the system.
8. Install the filler cap and make sure it is tight.
9. Run the engine to raise the coolant to working temperature and pressure.

10. Stop the engine, checks for leaks and re-check the coolant level and top up if necessary.

## (For: CT380 [T4F PUN], CT430 [T4F PUN])

⚠ **CAUTION** The cooling system is pressurised when the coolant is hot. If you remove the cap, hot coolant can spray out and burn you. Make sure that the engine is cool before you work on the cooling system.

**Figure 66.**

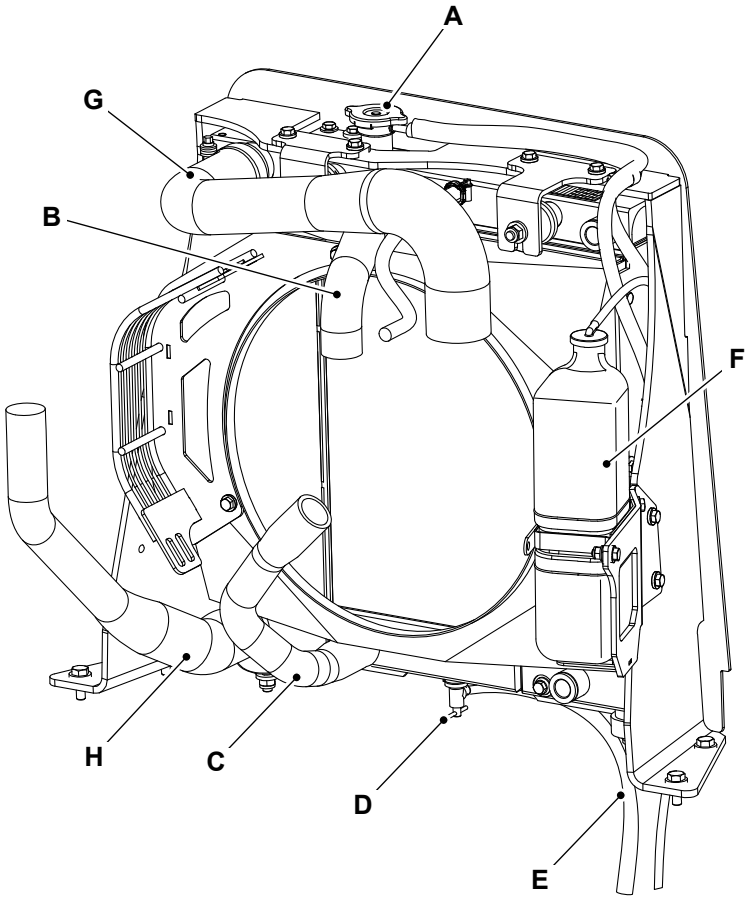


**A** Radiator cap
**B** Top radiator hose
**C** Bottom radiator hose
**D** Drain valve
**E** Drain hose
**F** Recovery bottle
**G** CAC (Charge Air Cooler) inlet hose
**H** CAC outlet hose

1. Make the machine safe.
   Refer to: Maintenance Positions (Page 99).
2. Open the engine compartment cover.
3. Carefully remove the radiator cap. Let any pressure escape before removing the cap. Refer to Figure 66.
4. Put the suitable size of container below the drain valve or bottom radiator hose.
5. Open the drain valve or remove the bottom radiator hose to drain the coolant. Refer to Figure 66.
6. Flush the system with clean water. After flushing, close the drain valve and install the radiator bottom hose.
7. Use the necessary mix of clean, soft water and antifreeze. Fill the cooling system.
   Refer to: Fluids, Lubricants and Capacities (Page 149).
   7.1. Do not fill the machine at more than 5 litres per minute. If the fill rate is any higher than this there is a possibility of air trapped in the system.

8. Install the filler cap and make sure it is tight.
9. Run the engine to raise the coolant to working temperature and pressure.
10. Stop the engine, checks for leaks and re-check the coolant level and top up if necessary.

# Cooling Pack

## Clean

1. Make the machine safe.
   Refer to: Maintenance Positions (Page 99).
2. Let the engine cool.
3. Get access to the cooling pack.
   Refer to: Access Apertures (Page 102).
4. If necessary, use a soft bristle brush or compressed air to remove all debris from the cooling pack.

## Check (Condition)

1. Make the machine safe.
2. Let the engine cool.
3. Get access to the cooling pack.
4. Check the condition of the hoses, radiator and fan for:
   4.1. Condition.
   4.2. Damage.
   4.3. Security.
5. Replace the system hoses/radiator if necessary.

# Brakes

## Park Brake

### Check (Operation)

⚠ **WARNING** Before testing the park brake make sure the area around the machine is clear of people.

**WARNING** Do not use a machine with a faulty park brake.

When the park brakes are applied the LED (Light Emitting Diode) on the instrument panel will illuminate. The engine can only be started when the drive lever is in park brake position.

Pushing the emergency stop switch will stop the engine causing the pressure in the braking system to fall and the brakes to be applied.

1. Make sure your seat belt is securely fastened.
2. Drive the machine to a suitable slope.
   Refer to: General (Page 59).
3. Engage the park brake. Machine should not move.

If the machine moved during the test, drive the machine to a suitable flat location and contact your JCB dealer to inspect the park brake. Do not use the machine until the fault is rectified.

# Drum

## Scraper

### Check (Condition)

### Smooth Drum Scraper

The scrapers are designed for use when rolling asphalt and in conjunction with the sprinkler system.

If earth is being compacted the scrapers should be released from the drum.

1. Make the machine safe.
   Refer to: Maintenance Positions (Page 99).
2. Check the correct distance between the drum and the scraper.
3. If necessary, loosen the fasteners on the scraper and set to the correct distance.
   Refer to: General (Page 103).
4. Tighten the fasteners to the correct torque value.
   Refer to: Torque Values (Page 152).
5. Repeat steps 2 to 4 for the other scrapers.

**Figure 67.**

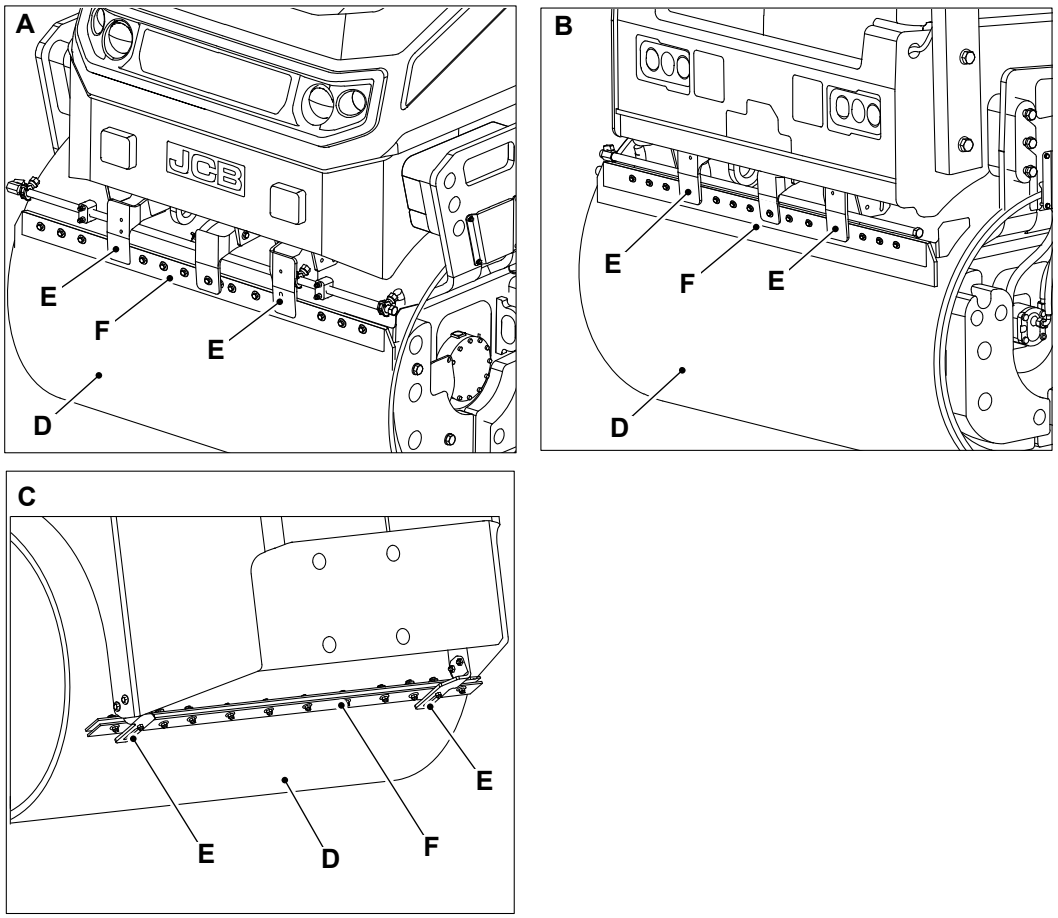


**A** Front side scraper
**B** Rear side scraper
**C** Bottom side scraper
**D** Drum

**E** Fasteners

**F** Scraper

### Clean

### Clean

Make the machine safe.
Refer to: Maintenance Positions (Page 99).

Remove the dirt and debris with the clean water.

## Sprinkler System

### Water Tank

#### Check (Level)

⚠ **WARNING** Antifreeze can be harmful and is restricted to professional users only. Obey the manufacturer's instructions when handling full strength or diluted antifreeze and always use appropriate PPE. Inappropriate coolant handling may damage fertility or the unborn child.

The sprinkler water tank level indicator gauge and filler cap are located at the right hand side of the operator seat. Make sure to use the antifreeze in the water tank while operating the machine in extremely cold climate.

1. Make the machine safe.
2. Check the water level indicator gauge, if necessary fill the tank through filler cap.

**Figure 68.**

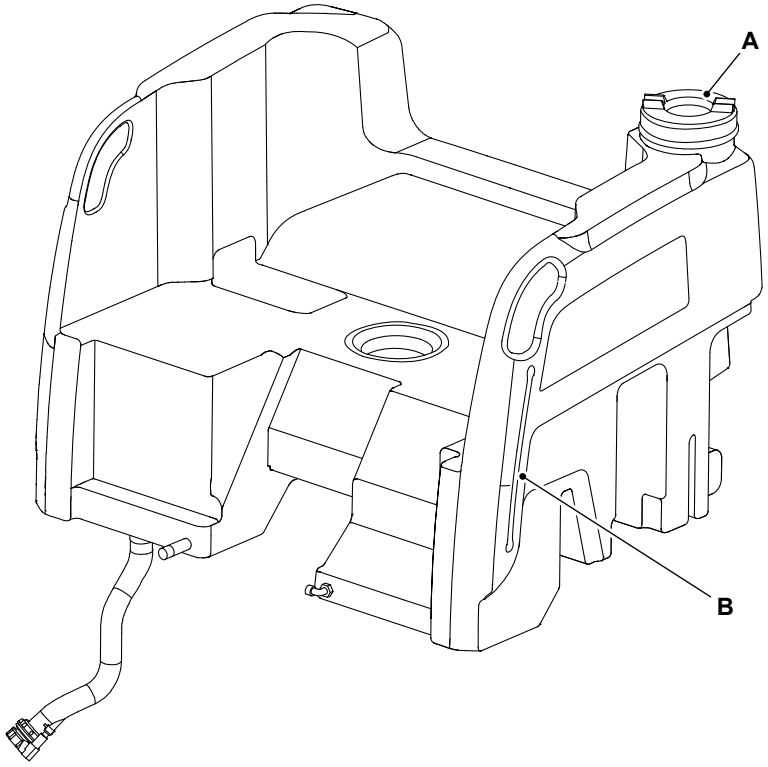


**A** Filler cap

**B** Water level indicator gauge

### Clean

The sprinkler system drain cap is located at the rear of the machine. Refer to Figure 69.

To drain the sprinkler system:

1. Make the machine safe.
2. Remove the water tank filler cap.
3. Open the drain cap and drain the tank.
4. Check the O-ring located on the drain cap. If necessary, replace the O-ring.
5. Close the drain cap.
6. Install the water tank filler cap. Refer to Figure 69.

**Figure 69.**

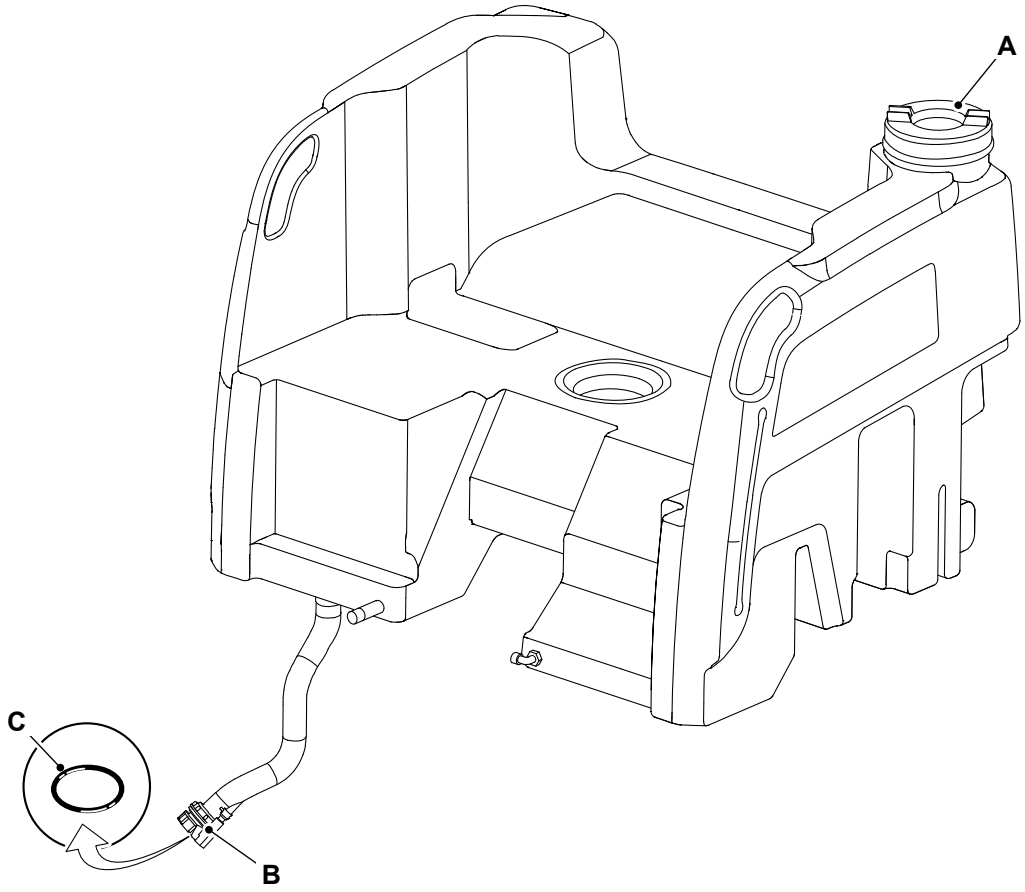


**A** Filler cap
**B** Drain cap
**C** O-ring

## Cleaning of Sprinkler Pipe and Nozzle

To clean the sprinkler system, proceed as follows:

1. Make the machine safe.
   Refer to: Maintenance Positions (Page 99).
2. Drain the water tank.
3. Remove the water filter element.
   Refer to: Replace (Page 131).
4. Open the drain tap. Refer to Figure 70.

5. Insert a hose into the water tank and the spray pipes and flush the system through with clean water.
6. Remove the sprinkler nozzles and clean with clean water.
7. Close the drain tap.
8. Install the nozzles.
9. Install the water filter element.
10. Fill the water tank to the correct level.

**Figure 70.**

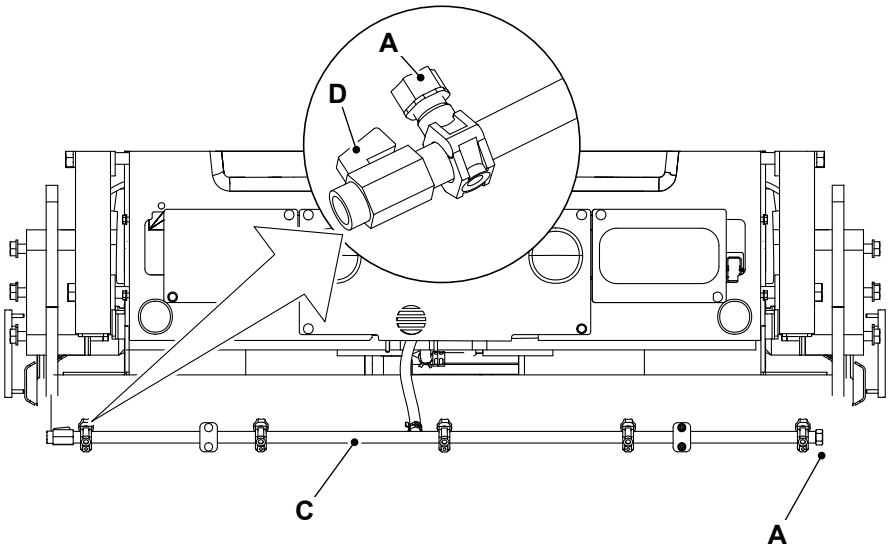


**A** Nozzle
**B** End cap
**C** Sprinkler/spray pipe
**D** Drain tap

## Draining of Water at Pump

1. Make the machine safe.
2. Get access to the water pump. Refer to Figure 71.

Figure 71.

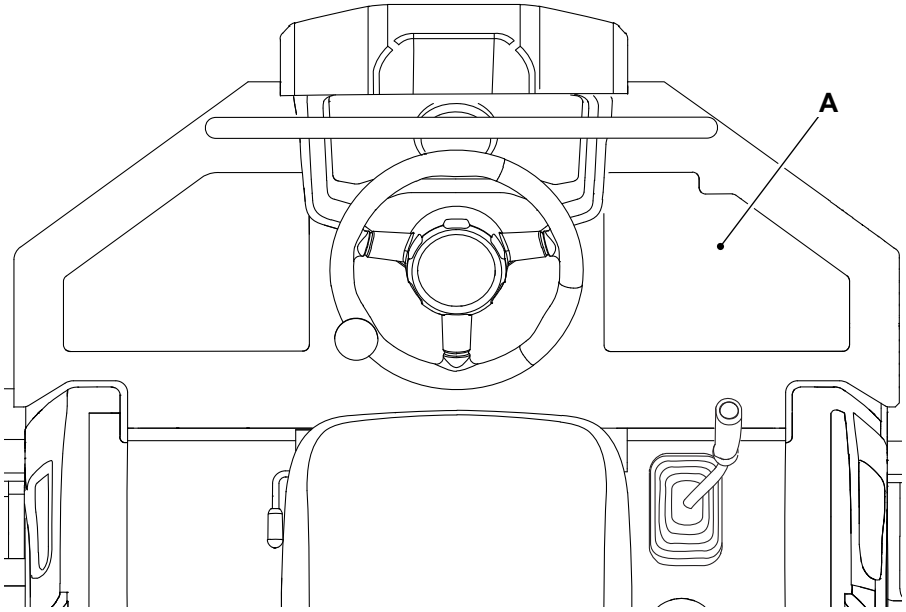


**A** Access panel

3. Push the lever to disconnect the hoses from the pump. Refer to Figure 72.

Figure 72.

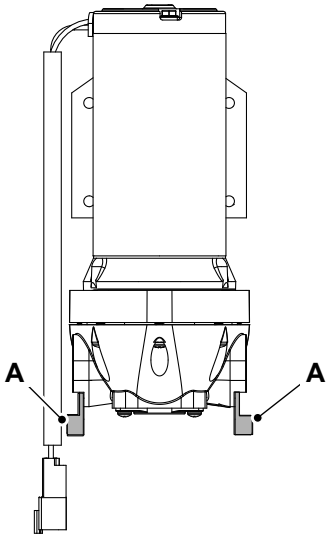


**A** Lever

4. Drain the trapped water from hoses.
5. Connect the hoses.

## Draining at Water Sprinkler Coupler

1. Make the machine safe.
2. Get access to the water sprinkler coupler. Coupler is located between articulation joint.

Figure 73.

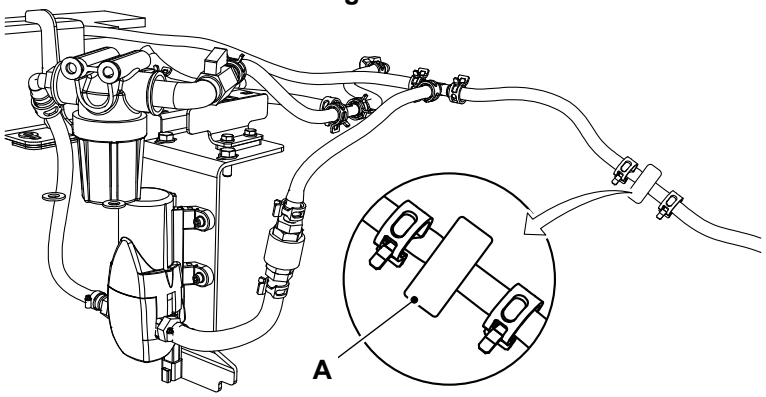


**A** Coupler

3. Open the coupler.
4. Drain the trapped water from the hoses.
5. Close the coupler.
6. Make sure that the coupler is tighten correctly. Hand tight only.

## Water Filter Element

### Replace

The sprinkler system water filter element is located under the rear frame, below the water tank.

1. Make the machine safe.
   Refer to: Maintenance Positions (Page 99).
2. Drain the water tank.
3. Open the panel to get access to the filter element. Refer to Figure 74.
4. Remove the water filter bowl.
5. Remove and discard the filter element.
6. Install the new filter element.
7. Check the seal on the filter element bowl. If necessary, replace the seal.
8. Install the filter bowl onto the filter head. Hand tight only.
9. Fill the water tank and operate the sprinkler system.
10. Check the filter for leaks.

**Figure 74.**

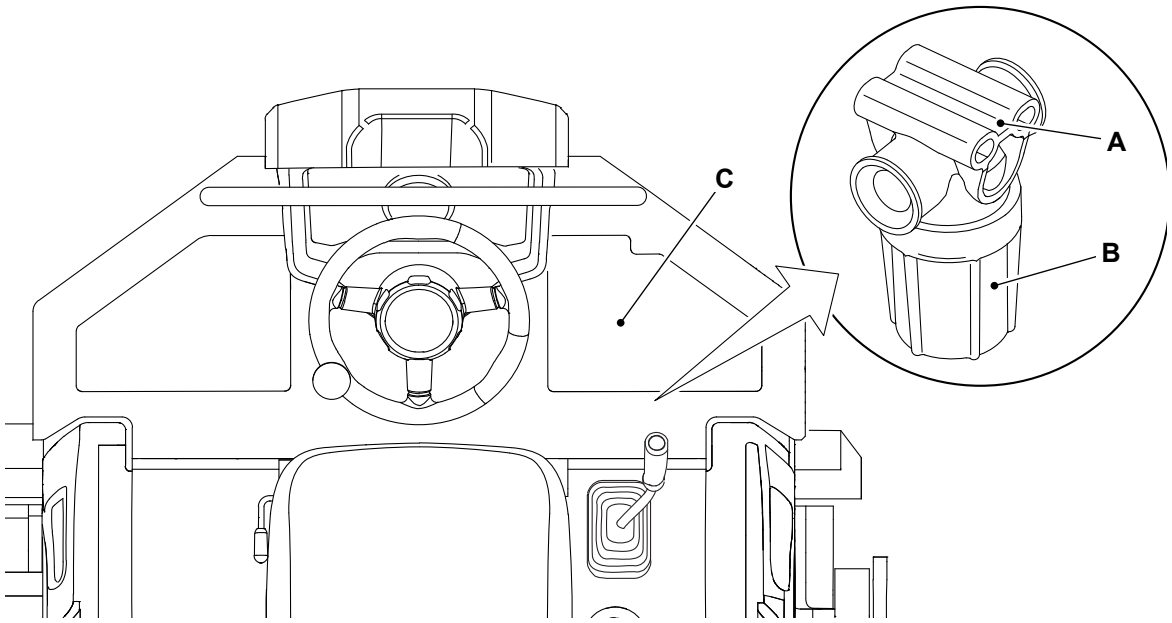


**A** Filter head
**B** Filter element
**C** Access panel

# Vibration System

## General

### Grease

Grease lubricated shaft machines only.

### Changing the Vibration Shaft Grease

Do not use vibration oil in grease lubricated shaft drums.

These drums are installed with lifetime grease only from the factory and it is maintenance free. The lifetime grease need only be replaced following dismantling and reassembly of the drum shaft. During re-assembly use only JCB Special Grease.

The lifetime grease installed from the factory is brown in colour. JCB Special Grease is blue in colour.

# Hydraulic System

## General

### Discharge

1. Park the machine on firm level ground.
2. Stop the engine.
3. Turn the ignition to the off position.
4. Remove the starter key.
5. Wait for the specified time to dissipate any residual hydraulic pressure.
   Duration: 30s

### Check (Condition)

### Hydraulic Hoses

⚠ **WARNING** Damaged hoses can cause fatal accidents. Examine the hoses regularly. Do not use the machine if a hose or hose fixture is damaged.

**WARNING** Fine jets of fluid at high pressure can penetrate the skin. Keep face and hands well clear of fluid under pressure and wear personal protective equipment. Hold a piece of cardboard close to suspected leaks and then examine the cardboard for signs of fluid. If fluid penetrates your skin, get medical help immediately.

Examine the hoses for:

- Damaged hose ends
- Worn or cracked outer covers
- Ballooned outer covers
- Kinked or crushed hoses
- Exposed armouring in the outer covers
- Displaced hose end fittings.
- Worn cover sheathing or hose burst protection covering

Replace a damaged hose before you use the machine again.

The replacement hoses must be of the same size, standard and pressure rating. If necessary, for more information contact your JCB dealer.

### Check (Leaks)

⚠ **Notice:** If the fluid is cloudy, then water or air has contaminated the system. This could damage the hydraulic pump. Contact your JCB dealer immediately.

1. Make the machine safe.
2. Open the access covers.
3. Check the hydraulic hoses for damage.
4. Close the access covers.
5. If necessary, contact your JCB dealer.

## Oil

### Check (Level)

1. Make the machine safe.
   Refer to: Maintenance Positions (Page 99).

2. Look at the hydraulic fluid in the sight tube. If the hydraulic fluid is cloudy, water or air is in the system. Water or air in the system can damage the hydraulic pump. Contact your JCB dealer if the hydraulic fluid is cloudy.
   Refer to: Service Points (Page 100).
3. The level of hydraulic fluid should be between the two marks on the sight tube.
4. If necessary, add the recommended hydraulic fluid:
   Refer to: Fluids, Lubricants and Capacities (Page 149).
   4.1. Release the pressure from the hydraulic tank.
   Refer to: Discharge (Page 134).
   4.2. Get safe access to the hydraulic filler port.
   Refer to: Service Points (Page 100).
   4.3. Use a suitable container to add the hydraulic fluid through the filler port.
   4.4. Check the level of hydraulic fluid.

## Replace

⚠ **Notice:** Ensure that dirt etc. does not enter the hydraulic system during this job.

Hydraulic fluid at system pressure can injure you. Relieve the system pressure before changing the Hydraulic filter element.

Drain the hydraulic tank when the oil is warm.

More dirt is removed from the hydraulic system with warm oil than with cold.

**Figure 75.**

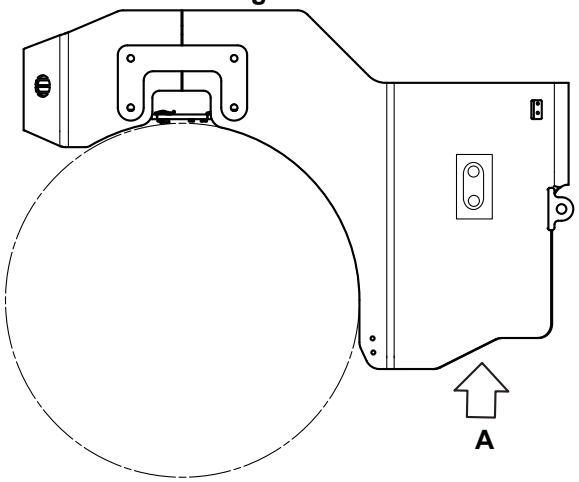


**A** Drain plug location

1. Make the machine safe.
   Refer to: Maintenance Positions (Page 99).
2. Clean the filler cap (breather), drain plug and the surface of the hydraulic oil reservoir.
3. Remove the filler cap.
4. Put a container of suitable size below the drain plug on the left hand side of the front chassis. Do not confuse with the fuel tank drain plug. Refer to Figure 75.
5. Remove the drain plug and drain the oil.
6. Install drain plug.

**Figure 76.**

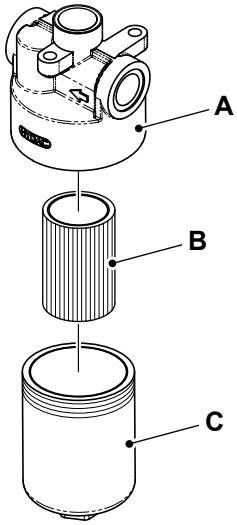


**A** Filter head
**B** Filter element
**C** Filter bowl

1. Clean the area around the filter assembly. Refer to Figure 76.
2. Remove the filter bowl and dispose of the filter element.
3. Clean the filter bowl.
4. Check the O-ring located on the filter head. If necessary, replace the O-ring.
5. Install the filter and tighten the filter bowl.
6. Check the filler screen for damage and impurities. If necessary clean or replace the filler screen.
7. Fill the tank with recommended oil through the filler.
   Refer to: Fluids, Lubricants and Capacities (Page 149).
   7.1. Add oil until the oil level is above the filler screen.
8. Check the O-ring on the filer cap for damage. Replace if necessary.
9. Replace the filler cap.
10. Run the engine for a few minutes, then check the oil level.
    Refer to: Check (Level) (Page 134).
    10.1. Add oil if necessary.
11. Check the oil filter and drain plug for leaks.

# Cylinders / Rams

## Check (Condition)

Extend each ram fully, one at a time and visually examine for score marks, dents, leaks or similar defects. Make the machine safe before inspecting each ram.

If a ram piston appears defective, contact your service engineer or JCB dealer.

# Electrical System

## Fuses and Relays

### Primary Fuses- Engine Compartment cover

Open the engine compartment cover to get access to the primary fuses.

**Figure 77.**

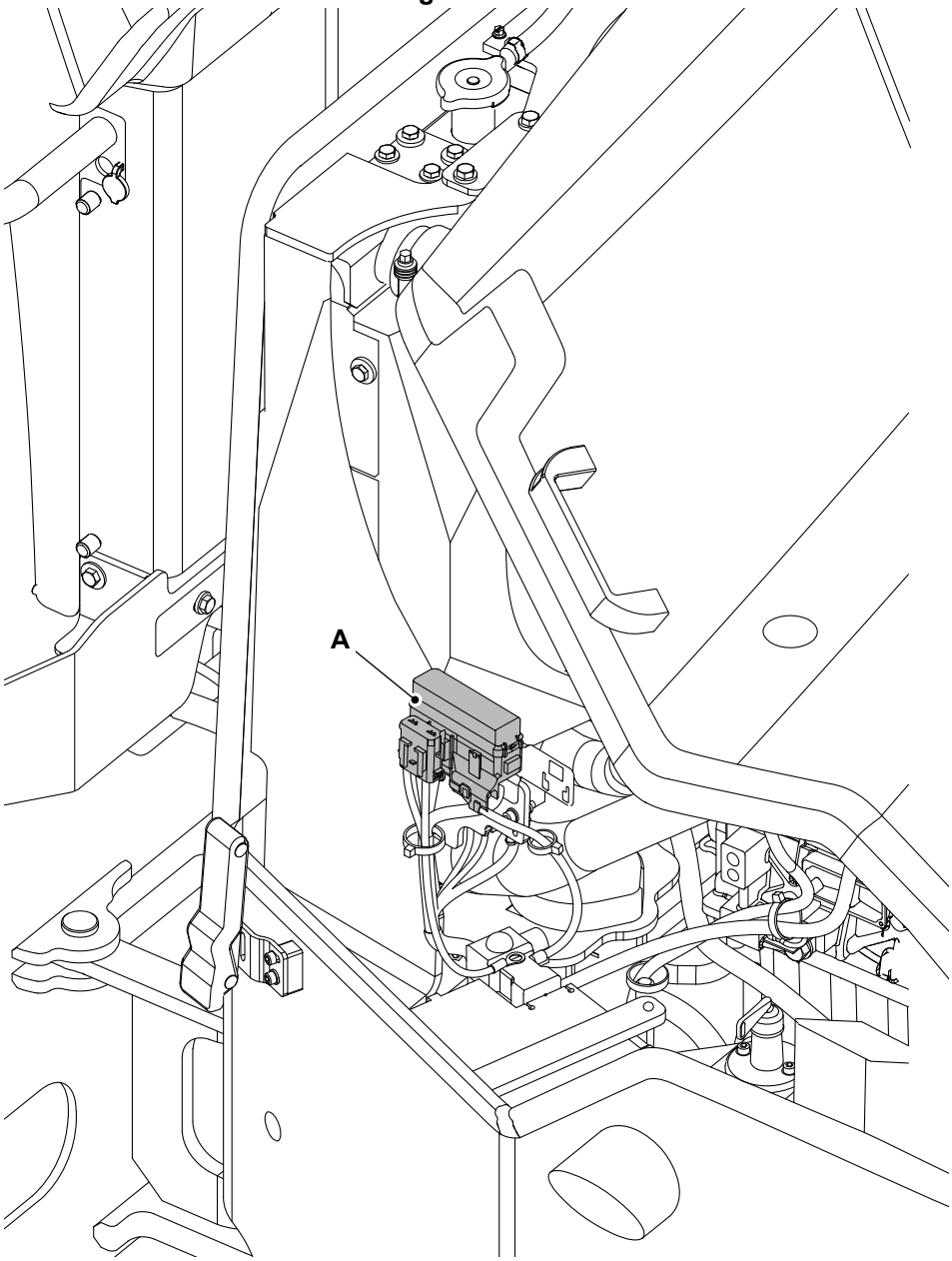


**A** Primary fuse box

### Secondary Fuses and Relays- Steering Column

⚠ **Notice:** Always replace fuses with ones of correct ampere rating to avoid electrical system damage.

The electrical circuits are protected by fuses. If a fuse blows, find out why before a new one is installed. Refer to: Fuses (Page 153).

The secondary fuses and relays are situated in the back side of steering column panel. Refer to Figure 78.

To get accesses to the secondary fuses and relays:

1. Make the machine safe.
   Refer to: Maintenance Positions (Page 99).
2. Remove the screws.
3. Remove the panel. Refer to Figure 78.

**Figure 78.**

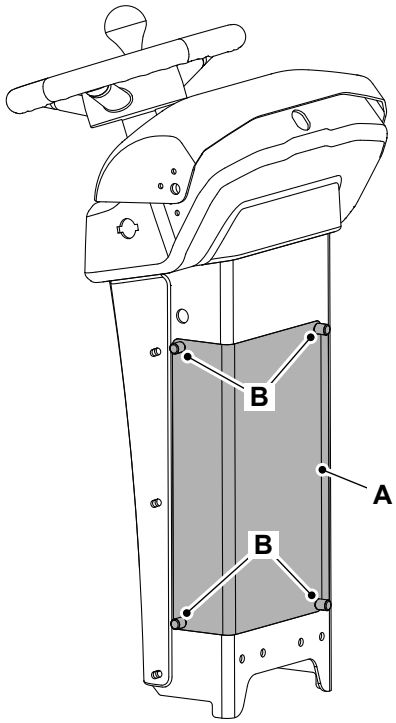


**A** Panel **B** Screws

# General

## Check (Operation)

Make sure all of the electrical equipment operates correctly, for example:

- Switches
- Warning lights
- Beacon
- Alarms
- Horn
- Hourmeter/display
- Battery
- Lights

All defective equipment must be repaired before the machine is used.

## Check (Condition)

Examine the electrical circuits regularly for:

- Damaged connectors
- Loose connections
- Chafing on the wiring harnesses
- Corrosion
- Missing insulation

- Incorrect routing of the wiring harnesses.

Do not use the machine if one or more of these faults are found. You must make sure that the electrical circuit is repaired immediately.

# Battery

## Clean

⚠ **WARNING** Keep metal watch straps and any metal fasteners on your clothes, clear of the positive (+) battery terminal. Such items can short between the terminal and nearby metal work. If it happens you can get burned.

1. Make the machine safe.
2. Get access to the battery.
3. If the terminal posts are corroded and covered with white powder wash them with hot water. If there is considerable corrosion, clean the terminal posts with a wire brush or abrasive paper. Refer to Figure 79.

**Figure 79.**

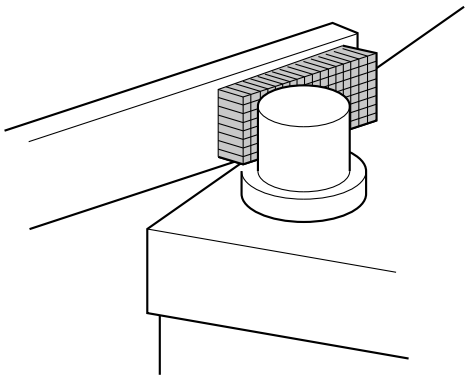

4. Apply a thin layer of petroleum jelly to the terminal posts.

## Connect

⚠ **WARNING** Keep metal watch straps and any metal fasteners on your clothes, clear of the positive (+) battery terminal. Such items can short between the terminal and nearby metal work. If it happens you can get burned.

**CAUTION** The machine is negatively earthed. Always connect the negative pole of the battery to earth.

When connecting the battery, connect the earth (-) lead last.

When disconnecting the battery, disconnect the earth (-) lead first.

**CAUTION** Understand the electrical circuit before connecting or disconnecting an electrical component. A wrong connection can cause injury and/or damage.

1. Make the machine safe.
   Refer to: Maintenance Positions (Page 99).
2. Get access to the batteries.
   Refer to: Disconnect (Page 140).
3. Connect the battery leads. Connect the earth (-) terminal last.
4. If the machine has a battery isolator, move the switch to the on position.

### Disconnect

⚠ **WARNING** Keep metal watch straps and any metal fasteners on your clothes, clear of the positive (+) battery terminal. Such items can short between the terminal and nearby metal work. If it happens you can get burned.

**CAUTION** The machine is negatively earthed. Always connect the negative pole of the battery to earth.

When connecting the battery, connect the earth (-) lead last.

When disconnecting the battery, disconnect the earth (-) lead first.

**CAUTION** Understand the electrical circuit before connecting or disconnecting an electrical component. A wrong connection can cause injury and/or damage.

**Notice:** Do not disconnect the battery while the engine is running, otherwise the electrical circuits may be damaged.

1. Make the machine safe.
   Refer to: Maintenance Positions (Page 99).
2. Get access to the batteries.
   Refer to: Access Apertures (Page 102).
3. If the machine has a battery isolator, switch off the battery isolator and remove the key.
   Refer to: Battery Isolator (Page 34).
4. Disconnect the battery leads. Disconnect the earth (-) terminal first.

## Battery Isolator

### Check (Operation)

⚠ **Notice:** Do not isolate the machine electrics when the engine is running, this may cause damage to the machine electrics.

1. Isolate the machine electrics.
2. Make sure that the machine electrics are isolated and the machine will not start.

A defective isolator must be repaired before the machine is used. For more information, contact your JCB dealer.

# Technical Data
## Static Dimensions

### Dimensions

For: CT380 [STV PUN], CT380 [T4F PUN] ..... Page 142
For: CT430 [STV PUN], CT430 [T4F PUN] ..... Page 143

(For: CT380 [STV PUN], CT380 [T4F PUN])

**Figure 80.**

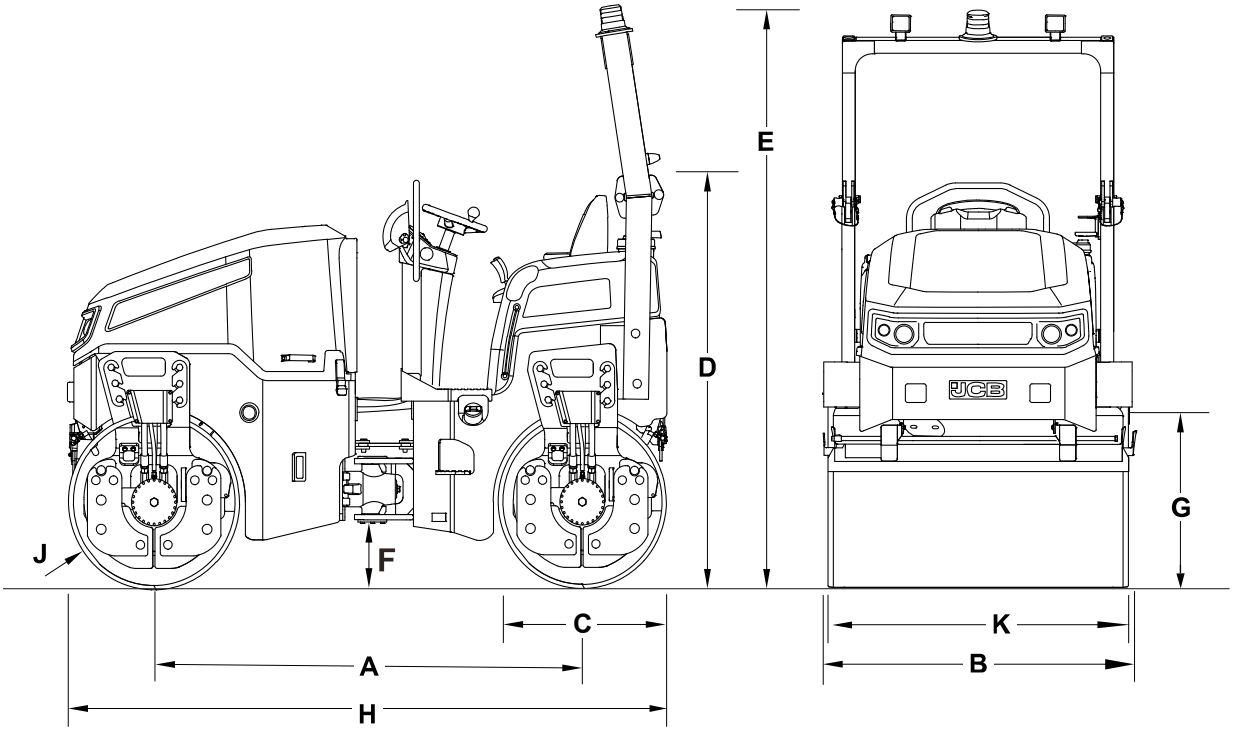


**Table 17.**

| Item | Description | Value |
|---|---|---|
| A | Wheelbase | 2,025mm |
| B | Overall width | 1,410mm |
| C | Drum diameter | 800mm |
| D | Height to the top of seat | 1,885mm |
| E | Height with ROPS (Roll-Over Protective Structure) (including beacon) | 2,690mm |
| F | Ground clearance | 300mm |
| G | Kerb clearance | 680mm |
| H | Total travel length | 2,860mm |
| J | Drum thickness | 17mm |
| K | Drum width | 1,300mm |

(For: CT430 [STV PUN], CT430 [T4F PUN])

**Figure 81.**

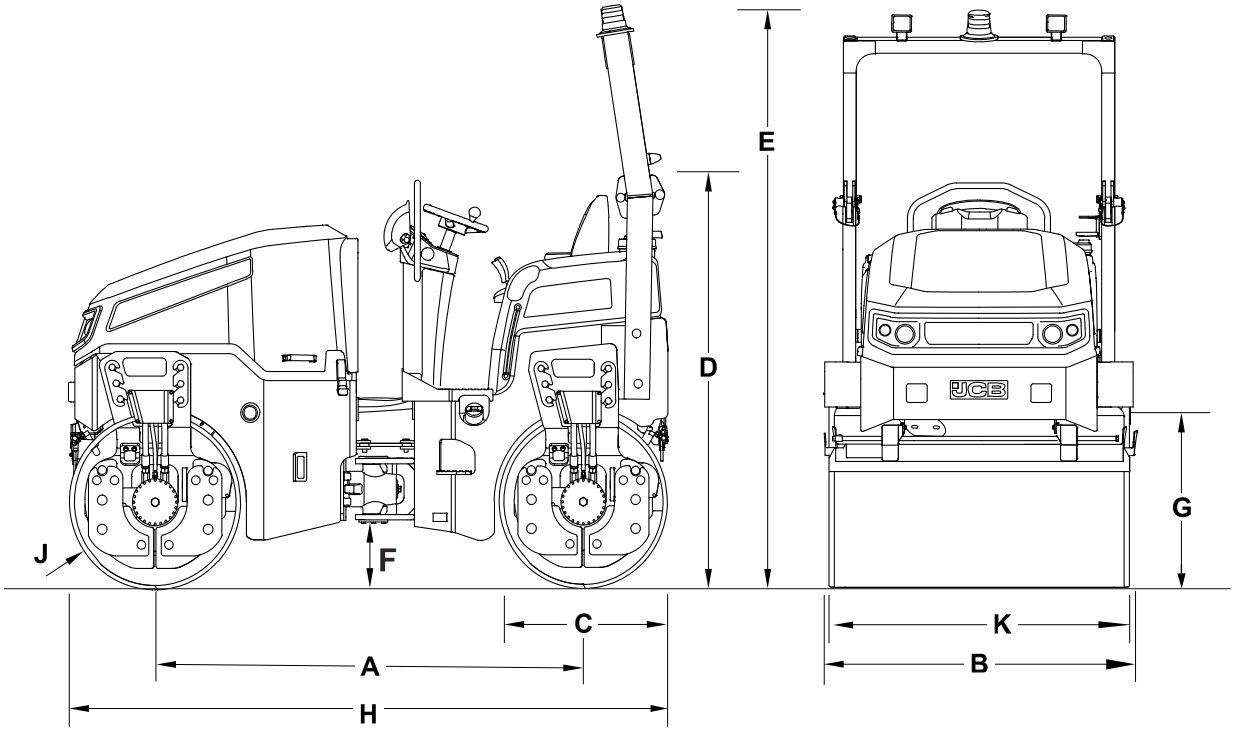


**Table 18.**

| Item | Description | Value |
|---|---|---|
| A | Wheelbase | 2,025mm |
| B | Overall width | 1,510mm |
| C | Drum diameter | 800mm |
| D | Height to the top of seat | 1,885mm |
| E | Height with ROPS (including beacon) | 2,690mm |
| F | Ground clearance | 300mm |
| G | Kerb clearance | 680mm |
| H | Total travel length | 2,860mm |
| J | Drum thickness | 17mm |
| K | Drum width | 1,400mm |

## Weights

For: CT380 [STV PUN], CT380 [T4F PUN] ..... Page 143
For: CT430 [STV PUN], CT430 [T4F PUN] ..... Page 144

(For: CT380 [STV PUN], CT380 [T4F PUN])

**Table 19.**

| Description | Value |
|---|---|
| Nominal weight | 3,820kg |
| Operating weight CECE (Committee for European Construction Equipment) | 4,100kg |

| Description | Value |
|---|---|
| Maximum operating weight | 4,400kg |
| Operating weight front | 2,050kg |
| Operating weight rear | 2,050kg |
| Static linear load front | 15.8 kg/cm |
| Static linear load rear | 15.8 kg/cm |

(For: CT430 [STV PUN], CT430 [T4F PUN])

**Table 20.**

| Description | Value |
|---|---|
| Nominal weight | 4,220kg |
| Operating weight CECE | 4,500kg |
| Maximum operating weight | 4,950kg |
| Operating weight front | 2,250kg |
| Operating weight rear | 2,250kg |
| Static linear load front | 16.1 kg/cm |
| Static linear load rear | 16.1 kg/cm |

# Performance Dimensions

## General

For: CT380 [STV PUN], CT380 [T4F PUN] ..... Page 145
For: CT430 [STV PUN], CT430 [T4F PUN] ..... Page 145

(For: CT380 [STV PUN], CT380 [T4F PUN])

**Table 21.**

| Description | Values |
|---|---|
| Steering angle | 34° |
| Oscillation angle | 13° |
| Inner turning radius | 2,490mm |
| Drum offset (standard) | 80mm |
| Travel speed | 10km/h (6.2mph) |
| Gradeability with or without vibration | 30–40% |

**Table 22.**

| Description | Values | |
|---|---|---|
| Vibration stage | 1 | 2 |
| Vibration frequency | 50Hz | 60Hz |
| Amplitude | 0.5mm | |
| Centrifugal force | 59kN | 63kN |

(For: CT430 [STV PUN], CT430 [T4F PUN])

**Table 23.**

| Description | Values |
|---|---|
| Steering angle | 34° |
| Oscillation angle | 13° |
| Inner turning radius | 2,490mm |
| Drum offset (standard) | 80mm |
| Travel speed | 10km/h (6.2mph) |
| Gradeability with or without vibration | 30–40% |

**Table 24.**

| Description | Values | |
|---|---|---|
| Vibration stage | 1 | 2 |
| Vibration frequency | 50Hz | 60Hz |
| Amplitude | 0.5mm | |
| Centrifugal force | 59kN | 63kN |

# Noise Emissions

## General

⚠ **CAUTION** In some operating conditions the specified noise emission levels may be different to those shown. Factors such as workplace, other machinery and duration of exposure may require additional personal protective equipment to be provided.

To assist in compliance with European Directives 2000/14/EC and 2005/88/EC, the noise data values for this type of machine have been provided on the following page(s) and may be used for the assessment of risks to exposure from noise.

The noise data values shown only apply to CE marked machines.

For information relating to this machine when used with other JCB approved attachments, please refer to the literature accompanying the attachments.

**Table 25. Definition of terms**

| Term | Definition | Notes |
|---|---|---|
| LpA | A-weighted sound pressure level measured at the operator's station. | Determined in accordance with the test method defined in ISO 6396 and the dynamic test conditions defined on 2000/14/EC. |
| LwA | Equivalent A-weighted sound power level emitted by the machine. | Guaranteed equivalent sound power (external noise) determined in accordance with the dynamic test conditions defined in 2000/14/EC. |

## Noise Data

**Table 26. All Machines**

| Model | Engine rating (kW)[1] | LpA | LwA |
|---|---|---|---|
| CT380 | 36.5 | 87 db(A) | 104 db(A) |
| CT430 | 36.5 | 87 db(A) | 104 db(A) |

*(1) Net installed power.*

# Vibration Emissions

## General

⚠ **CAUTION** In some operating conditions the specified vibration emission levels may be different to those shown. Factors such as workplace, other machinery and duration of exposure may require additional personal protective equipment to be provided.

To assist in compliance with the European Directive 2002/44/EC, the duty specific vibration emission values for this machine type have been provided on the following page(s) and may be used for the assessment of risks to exposure from vibration.

Unless otherwise indicated for a specific operating condition, the vibration values are calculated with the machine equipped with the standard attachments (for example bucket, shovel, fork, etc.) for the respective operating condition.

The vibration values are calculated from measurements in three perpendicular axes (X, Y and Z). The highest weighted (RMS (Root Mean Square)) value is used to specify the vibration emission.

The axis upon which the highest weighted (RMS) value occurs is shown on the vibration chart for each of the machine operating duties, see dominant axis (X, Y or Z).

**Figure 82.**

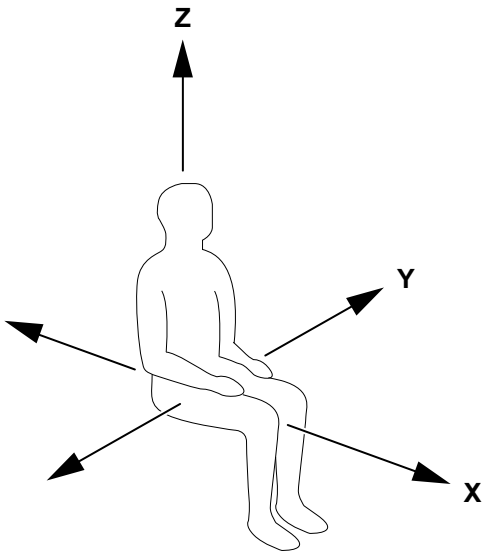


## Exposure to Vibration

Exposure to vibration can be minimised through:

- Selection of the correct size and capacity of machine, equipment and attachments for a particular application
- Use of a machine equipped with an appropriate seat, keeping the seat maintained and adjusted
- Checks to make sure that the machine is correctly maintained, reporting and correcting any faults
- Steering, braking, accelerating, shifting gears, moving the attachments and load smoothly
- Adjusting the machine speed and travel path to minimise the vibration level
- Keeping the terrain on worksites where the machine works and travels in good condition, removing any large rocks or obstacles and filling in any ditches and holes
- Choosing routes that avoid rough surfaces and, if this is not possible, drive more slowly to avoid bumping and jolting
- Travel over longer distances at an adjusted (medium) speed
- Avoiding bad postures, i.e. slumping in your seat, constantly leaning forward or sideways or driving with your back twisted.

## Vibration Data

The whole-body vibration emission determined in accordance with ISO 2631-1:1997 for this machine type is 0.37m/s² normalised to an 8h reference period [A(8)] and based upon a test cycle defined in SAE J116.

Hand-arm vibration determined in accordance with dynamic test conditions defined in ISO 5349-2: 2001 does not exceed 2.5m/s².

The single emission values for WBV and HAV (Hand-Arm Vibration) in accordance with SAE J1166, WBV is 0.31m/s² and HAV is 1.4m/s².

The whole-body vibration emission under representative operating conditions (according to the intended use) are shown.

**Figure 83.**

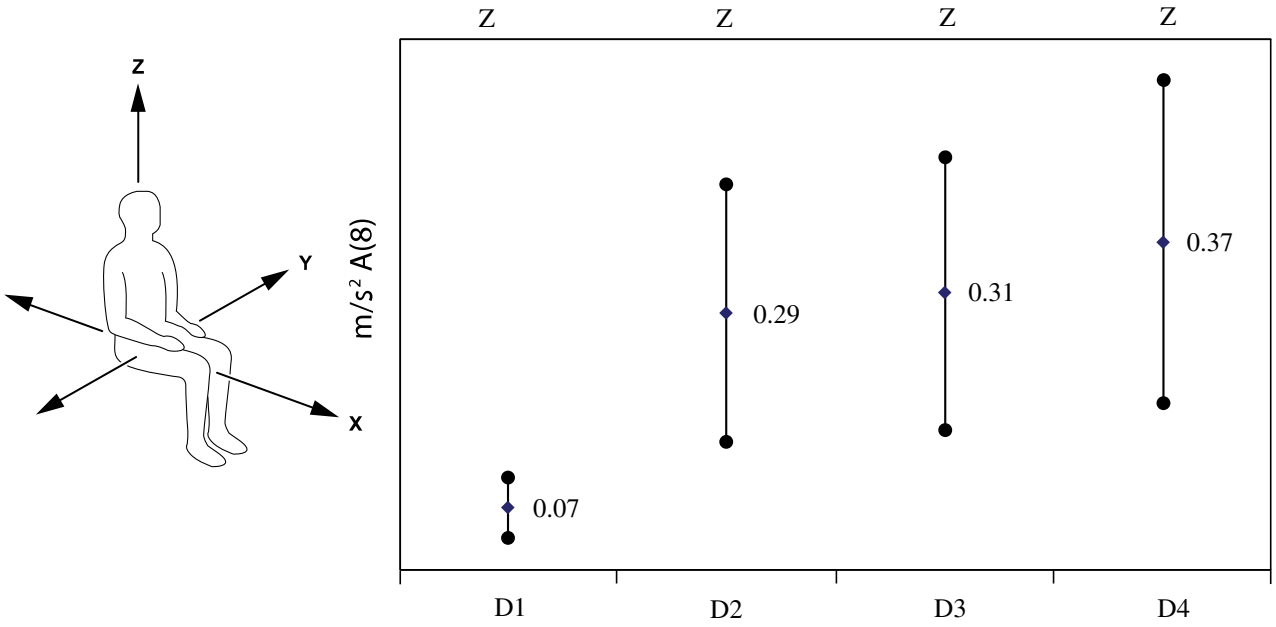


**X-Z** Dominant axis
**D2** Low frequency
**D4** High frequency
**D1** Low idle
**D3** High idle

Errors bars are due to variations in vibration emissions due to measurement uncertainty (50% in accordance with EN 12096:1997).

# Fluids, Lubricants and Capacities

## General

**Table 27.**

| Item | Capacity | Fluid/Lubricant | JCB Part Number | Container Size | International Specification |
|---|---|---|---|---|---|
| Fuel Tank | 64L | Diesel | - | - | Refer to 'Fuel' |
| Engine (Oil) | 8.9L | JCB Engine Oil UP 10W30 | 4001/3705 | 20L | API CJ-4 |
| Engine coolant (inorganic)(1) | 8.5L | JCB Antifreeze HP/Coolant-Concentrate | 4006/1120 | 20L | ASTM D6210 |
| Engine Coolant OAT (Organic Acid Technology)(1) | 8.5L | JCB Antifreeze HP/Coolant-Concentrate | 4006/1805 | 20L | ASTM D6210 |
| Hydraulic system | System 60L / Tank 52L | JCB hydraulic fluid HP 46 | 4002/0805 | 20L | For ambient temperature above -10°C (14.0°F) |
| | | JCB hydraulic fluid HP 32 | 4002/1025 | | For ambient temperature below -10°C (14.0°F) |
| Vibration system | 0.36 | JCB Special HP Grease | 4003/2017 | 0.4kg | - |
| Sprinkler system | 210L | Water | - | - | - |

*(1) Check which coolant type is installed in the machine before topping up the coolant. Mixing of different coolant types is not recommended and may result in invalidation of the warranty offered by JCB. In the event of mixing or if the coolant type is to be changed, the coolant circuit should be completely drained and flushed twice with clean water before re-filling with fresh coolant.*

## Fuel

⚠ **WARNING** Do not use petrol in this machine. Do not mix petrol with the diesel fuel. In storage tanks the petrol will form flammable vapours.

**Notice:** No warranty liability will be accepted for engine failures where unacceptable fuel grades (or their equivalent) have been used at any stage.

### Acceptable and Unacceptable Fuels

Use the same type of diesel fuel as used in cars (EN 590 for E.U. - ASTM D975-09B regulation - S 15 for U.S). Use of other types of fuel could damage the engine. Do not use dirty diesel fuel or mixtures of diesel fuel and water since this will cause serious engine faults.

Clean fuel prevents the fuel injectors from clogging. Immediately clean up any spillage during refuelling.

Never store diesel fuel in galvanized containers (i.e. coated with zinc). Diesel fuel and the galvanized coating react chemically to each other, producing flaking that quickly clogs filters or causes fuel pump and/or injector failure.

### Fuels for Low Temperatures

When operating the engine in ambient temperatures lower than 0°C (32.0°F), use suitable low temperature fuel normally available from fuel distributors and corresponding to the specifications in the table.

These fuels reduce the formation of paraffin in diesel at low temperatures.

When paraffin forms in the diesel, the fuel filter becomes blocked interrupting the flow of fuel.

## Biodiesel Fuel

Fuels containing 10% methyl ester or B10, are suitable for use in this engine provided that they meet the specifications listed in the table.

Do not use vegetable oil as a biofuel for this engine.

Any failures resulting from the use of fuels other than recommended will not be warranted.

**Table 28. Fuel Compatibility**

| | Compatible | | Certification emission | | Warranty coverage | | Engine waste | |
|---|---|---|---|---|---|---|---|---|
| | yes | no | yes | no | yes | no | yes | no |
| EN 590, DIN 51628 - Military NATO fuel F-54 (S=10 ppm) | O | | O | | O | | | O |
| No 1 Diesel (US) - ASTM D 975-09 B - Grade 1-D S 15 (S=15 ppm) | O | | O | | O | | | O |
| No 1 Diesel (US) - ASTM D 975-09 B - Grade 1-D S 500 (S=500 ppm) | O | | | O | O(1) | | | O |
| No 2 Diesel (US) - ASTM D 975-09 B - Grade 2-D S 15 | O | | O | | O | | | O |
| No 2 Diesel (US) - ASTM D 975-09 B - Grade 2-D S 1500 | O | | | O | O(1) | | | O |
| ARCTIC (EN 590/ASTM D 975-09 B) | O(2) | | O | | O | | | O |
| High sulfur fuel < 5000 ppm (<0.5%) | O | | | O | O(1) | | | O(1) |
| High sulfur fuel > 5000 ppm (<0.5%) | O | | | O | O(3) | | | O(3) |
| High sulfur fuel > 10000 ppm (>1%) | | O | | O | | O | O | |
| Civil Jet Fuels Jet A/A1 | | O | | O | | O | O | |
| Civil Jet Fuels Jet B | | O | | O | | O | O | |
| Bio Fuels (EN14214) | O(4) | | O(4) | | O(4) | | | O(4) |

*(1) Except for catalyst clogged and EGR.*
*(2) Without adding oil.*
*(3) Except for catalyst clogged and EGR. Shorter oil change intervals.*
*(4) Max. 10% in fuel.*

## Effects of Fuel Contaminates

The effect of dirt, water and other contaminants in diesel can be disastrous for injection equipment:

### Dirt

A severely damaging contaminant. Finely machined and mated surfaces such as delivery valves and distributor rotors are susceptible to the abrasive nature of dirt particles - increased wear will almost inevitably lead to greater leakage, uneven running and poor fuel delivery.

### Water

Water can enter fuel through poor storage or careless handling, and will almost inevitably condense in fuel tanks. The smallest amounts of water can result in effects that are just as disastrous to the fuel injection pump as dirt, causing rapid wear, corrosion and in severe cases, even seizure. It is vitally important that water is prevented from reaching the fuel injection equipment. The filter/water trap must be drained regularly.

### Wax

Wax is precipitated from diesel when the ambient temperature falls below that of the fuel's cloud point, causing a restriction in fuel flow resulting in rough engine running. Special winter fuels may be available for engine operation at temperatures below 0°C (32.0°F). These fuels have a lower viscosity and limit wax formation.

### Chemical Contamination

Never store diesel fuel in galvanized containers (i.e. coated with zinc). Diesel fuel and the galvanized coating react chemically to each other, producing flaking that quickly clogs filters or causes fuel pump and/or injector failure.

It should be noted that exposure of fuel to surfaces containing Copper (Cu), Zinc (Zn), Sodium (Na), Potassium (K), Calcium (Ca), Magnesium (Mg), Barium (Ba), Phosphorus (P) or Lead (Pb) can adversely affect fuel quality and should be minimised.

## Coolant

⚠ **WARNING** Antifreeze can be harmful and is restricted to professional users only. Obey the manufacturer's instructions when handling full strength or diluted antifreeze and always use appropriate PPE. Inappropriate coolant handling may damage fertility or the unborn child.

**Notice:** Check which coolant type is installed in the machine before topping up the coolant. Mixing of different coolant types is not recommended and may result in invalidation of the warranty offered by JCB. In the event of mixing or if the coolant type is to be changed, the coolant circuit should be completely drained and flushed twice with clean water before re-filling with fresh coolant.

Check the strength of the coolant mixture at least once a year, preferably at the start of the cold period.

Replace the coolant mixture according to the intervals shown in the machine's Service Schedule.

You must dilute full strength coolant with clean water before use. You must dilute full strength coolant with distilled or de-ionized water.

The correct concentration of coolant protects the engine against frost damage in winter and provides year round protection against corrosion.

**Table 29.**

| Concentration | Level of protection |
|---|---|
| 50% (Standard) | Protects against damage down to -40°C (-40°F) |
| 60% (Extreme Conditions Only) | Protects against damage down to -56°C (-69°F) |

Do not exceed a 60% concentration, as the freezing protection provided reduces beyond this point.

- Make sure that the coolant complies with specification in this manual.
- Always read and understand the manufacturer's instructions.
- Make sure that a corrosion inhibitor is included. Serious damage to the cooling system can occur if corrosion inhibitors are not used.
- Care should be taken to not mix coolant types. Mixing coolant will have a detrimental effect on the performance of the coolant.

# Torque Values

## General

### Drums Scrapers

**Table 30.**

| | |
|---|---|
| Scrapers adjustment fasteners<br>Refer to: Scraper (Page 126). | 24N·m |
| Vulcollan scraper bolts | 10N·m |

### Retrieval

**Table 31.**

| | |
|---|---|
| Bypass relief valve nut | 22N·m |

### ROPS

**Table 32.**

| | |
|---|---|
| ROPS (Roll-Over Protective Structure) Mounting bolts | 506N·m, 275N·m (Loctite) |
| ROPS hinge bolts | 100N·m |

# Electrical System

## General

**Table 33.**

| Item | Specification |
|---|---|
| Battery voltage/system voltage | 12V |
| Battery | 80Ah and 750 CCA |
| Battery dimension (length x width x height) | 278mm x 175mm x 190mm |

## Fuses

### Primary Fuses

**Figure 84.**

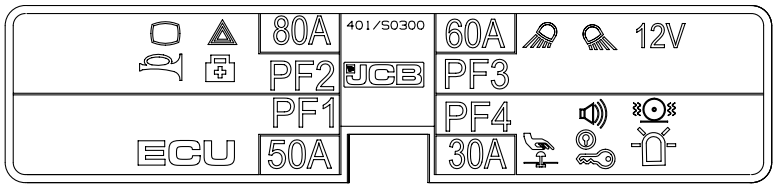


**Table 34.**

| Fuse No. | Circuits Protected | Rating |
|---|---|---|
| PF1 | ECU | 50A |
| PF2 | Instrument panel, Hazard, Horn and Diagnostic | 80A |
| PF3 | Front and rear worklights and Power socket | 60A |
| PF4 | Buzzer, Vibration, Alternator, Ignition relay, Beacon and | 30A |

## Secondary Fuses

**Figure 85.**

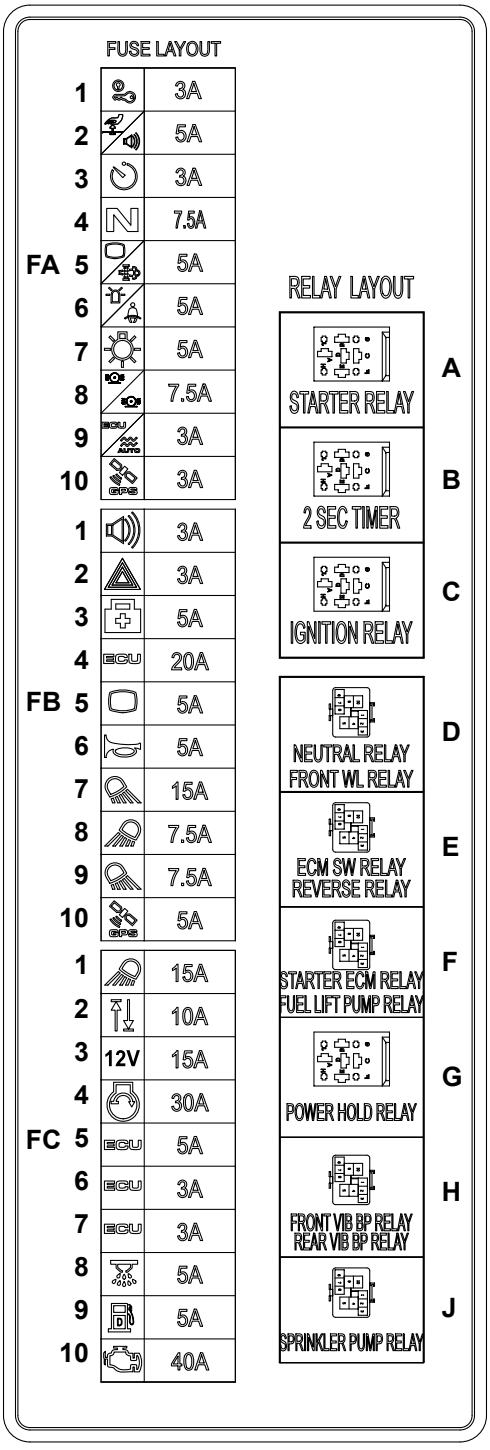


**Table 35.**

| Fuse No. | Circuits Protected | Rating |
|---|---|---|
| FA1 | Ignition relay | 3A |
| FA2 | Emergency stop / Buzzer | 5A |
| FA3 | Timer relay | 3A |
| FA4 | Neutral parkbrake | 7.5A |

| Fuse No. | Circuits Protected | Rating |
|---|---|---|
| FA5 | Instrument panel | 5A |
| FA6 | Beacon / Seat belt | 5A |
| FA7 | Front worklight | 5A |
| FA8 | Vibration | 7.5A |
| FA9 | ECU (Electronic Control Unit) / Auto vibration | 3A |
| FA10 | Livelink | 3A |
| FB1 | Reverse alarm | 3A |
| FB2 | Hazard | 3A |
| FB3 | Diagnostic/Livelink | 5A |
| FB4 | ECU | 20A |
| FB5 | Instrument panel | 5A |
| FB6 | Horn | 5A |
| FB7 | Rear worklight | 15A |
| FB8 | Front worklight LED (Light Emitting Diode) | 7.5A |
| FB9 | Rear worklight LED | 7.5A |
| FB10 | Livelink | 5A |
| FC1 | Front worklight | 15A |
| FC2 | Limits / edge cutter | 10A |
| FC3 | Power socket | 15A |
| FC4 | Engine Start / crank | 30A |
| FC5 | ECU | 5A |
| FC6 | ECU | 3A |
| FC7 | ECU | 3A |
| FC8 | Sprinkler | 5A |
| FC9 | Diesel fuel | 5A |
| FC10 | Engine (side) | 40A |

# Relays

**Figure 86.**

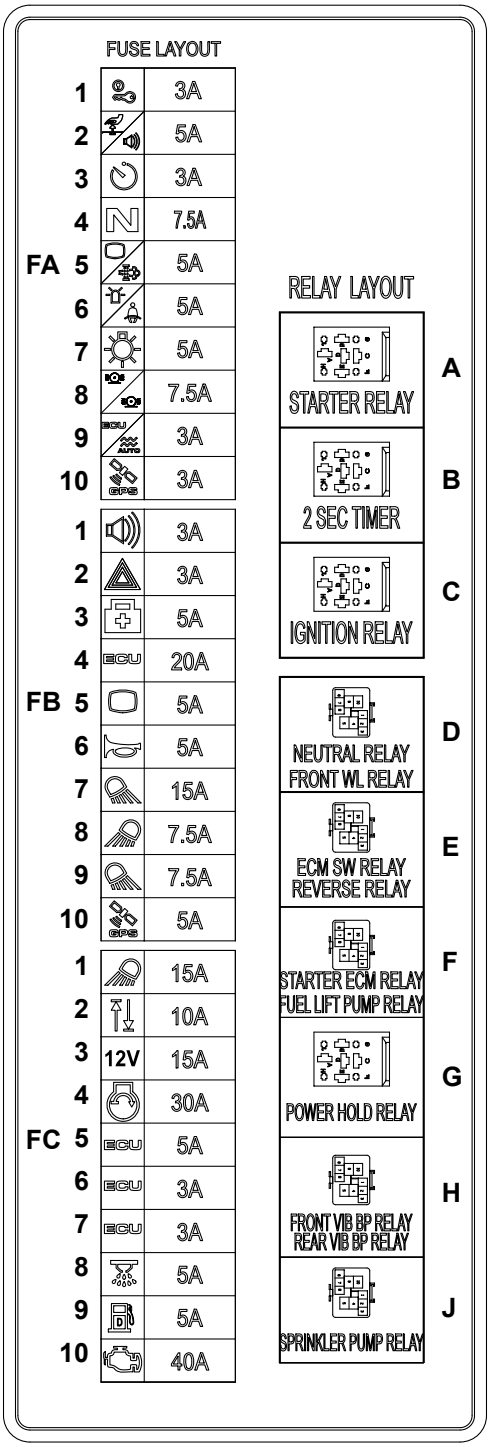


**Table 36.**

| Relay No. | Description |
|---|---|
| A | Starter |
| B | 2s timer |
| C | Ignition |
| D | Neutral /Front worklight |

| Relay No. | Description |
|---|---|
| E | ECM (Engine Control Module) switch / Reverse |
| F | Starter ECM / Fuel lift pump |
| G | Power hold |
| H | Front / Rear vibration back pressure |
| J | Sprinkler pump |

# Engine

## General

**Table 37.**

| Data | Description |
|---|---|
| Make | Kohler |
| Model | KDI 1903TCR |
| Gross power rating at 2600 RPM (Revolutions Per Minute) | 36.5kW |
| Engine management | Electronic |
| Cooling system | Suction fan |
| Drive to front and rear drum | Yes |
| Transmission | Hydrostatic |
| Travel motor | Rexroth |
| Service brake | Hydrostatic propulsion system |
| Secondary brake | Hydraulically released multi-discbrake on front and rear drum |

## Exhaust After Treatment (EAT)

### Introduction

For the applicable regulations this engine has been designed in compliance with, the emissions control system is essential for meeting the requirements of exhaust emission content. The emissions control system is defined as any device, system or element of design which controls or reduces engine exhaust emissions.

To ensure the correct functioning of the engine and emissions control system all operation and maintenance must be conducted in accordance with the instructions of this manual. Incorrect operation, maintenance or repair of the engine and emissions control system may lead reduced product life, loss of performance or malfunctions.

Your engine is equipped with a fully automated after-treatment system. It has a sophisticated system of self-monitoring and fault detection to ensure it is both reliable and compliant to applicable emissions legislation. An operator warning system informs when the system is not functioning correctly or when intervention is required. Failure to respond to this warning system and rectify any detected fault will lead to the activation of a derate. This system will limit engine performance until the detected fault is rectified and may result in the machine being unable to conduct its mission.

Tampering with or modifying the engine may void the type approval and warranty. The on-board computer will log faults tampering conditions, inspection authorities will be able to read these logs with a scan tool.

The type-approval certificate is valid only when all of the following conditions are met:

- The engine and emissions control system are operated and maintained in accordance with the instructions of this manual.
- Prompt action is taken for the rectification of incorrect operation, maintenance or repair.
- No deliberate misuse or tampering of the engine or emission control system has occurred.

A DPF (Diesel Particulate Filter) is a used to remove diesel particulate matter or soot from the exhaust gas of a diesel engine, in order to reduce emissions. Excess soot deposited in the filter is cleanly burned off by raising the temperature of the exhaust through the process of a running regeneration.

An EGR (Exhaust Gas Recirculation) valve recirculates a portion of exhaust gas back into the engine to reduce nitrous oxide emissions.

If the engine is used for a prolonged period (100s of hours) in light duties and the soot level reaches a certain percentage, the engine is equipped with a mode which runs the after-treatment system at typical operating temperatures. In this way the DPF filter is regenerated while the engine is running normally. This is automatic and seamless to the operator and the machine can continue to be operated normally while this is happening. During regeneration the exhaust gases temperature is raised and the operator has the option to inhibit a regeneration if for example the machine is in a hazardous area.

Should the duty cycle continue to be very light the operator will be warned. If this occurs the operator has a choice to either operate the engine at a higher duty or complete the regeneration cycle with a manual regeneration. The engine is equipped with a setting that will automatically run the exhaust system hot enough while the machine is manual. The operator must acknowledge that the engine can run a manual regeneration by initiating the procedure. Refer to the machine operator manual manual regeneration initiation procedure.

If the operator ignores the warnings, and manual regeneration is not initiated, the DPF will clog and gradually reduce engine performance. Replacement or specialist cleaning will be required.

If there is excessive white smoke or excessive diesel smell from the exhaust system then if possible please perform a manual regeneration.
Refer to: Instrument Panel (Page 48).

# Declaration of Conformity

## General

A completed copy of the EC/UKCA Declaration of Conformity is supplied with all machines manufactured according to EC type examination and/or self-certification requirements.

A sample copy of the EC/UKCA Declaration of Conformity and a summary of the information that can appear is provided.
Refer to: Data (Page 161).

## Data

**Figure 87.**

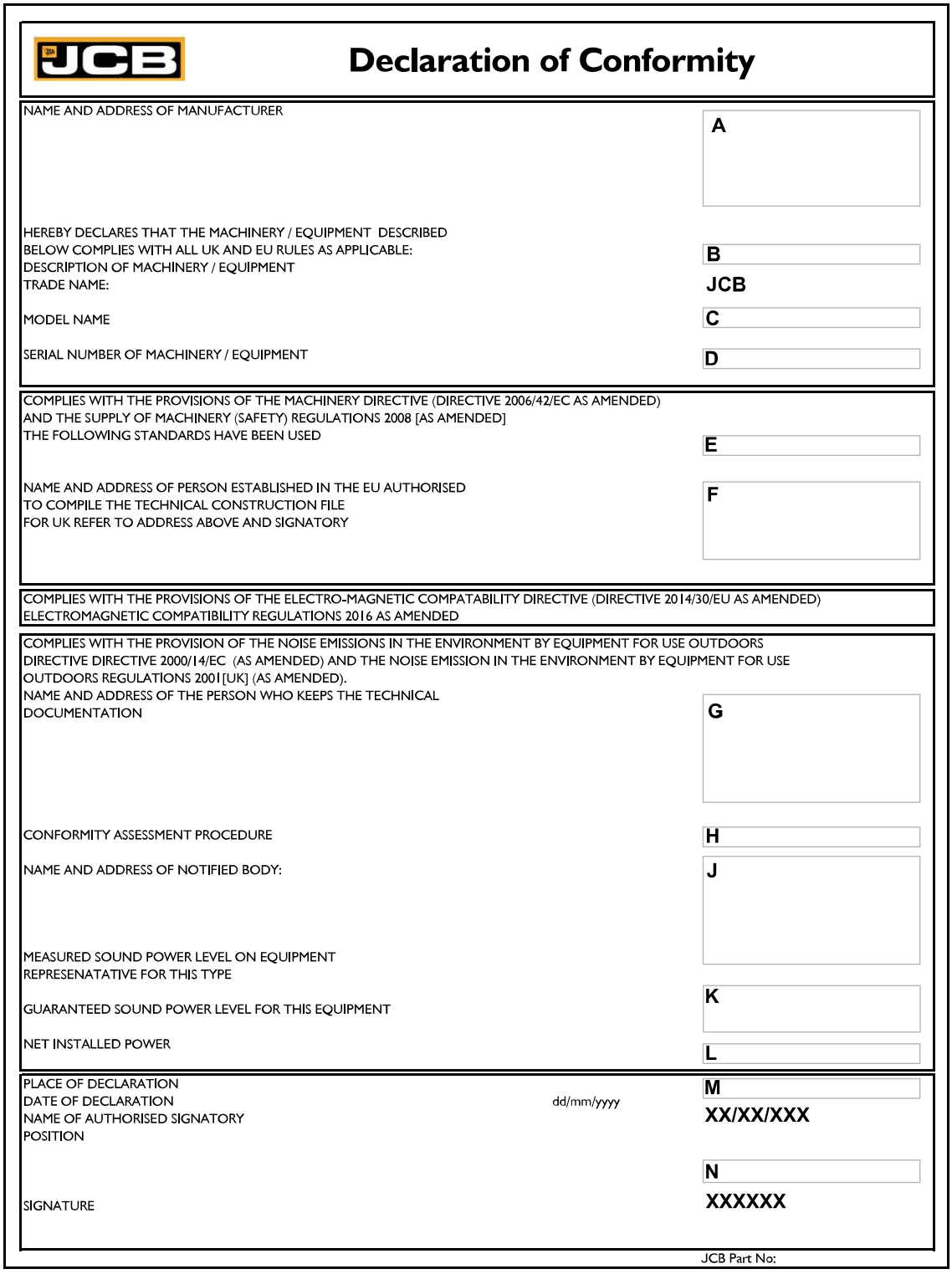

**Declaration of Conformity**

NAME AND ADDRESS OF MANUFACTURER — A

HEREBY DECLARES THAT THE MACHINERY / EQUIPMENT DESCRIBED
BELOW COMPLIES WITH ALL UK AND EU RULES AS APPLICABLE:
DESCRIPTION OF MACHINERY / EQUIPMENT — B
TRADE NAME: JCB

MODEL NAME — C

SERIAL NUMBER OF MACHINERY / EQUIPMENT — D

COMPLIES WITH THE PROVISIONS OF THE MACHINERY DIRECTIVE (DIRECTIVE 2006/42/EC AS AMENDED)
AND THE SUPPLY OF MACHINERY (SAFETY) REGULATIONS 2008 [AS AMENDED]
THE FOLLOWING STANDARDS HAVE BEEN USED — E

NAME AND ADDRESS OF PERSON ESTABLISHED IN THE EU AUTHORISED
TO COMPILE THE TECHNICAL CONSTRUCTION FILE
FOR UK REFER TO ADDRESS ABOVE AND SIGNATORY — F

COMPLIES WITH THE PROVISIONS OF THE ELECTRO-MAGNETIC COMPATABILITY DIRECTIVE (DIRECTIVE 2014/30/EU AS AMENDED)
ELECTROMAGNETIC COMPATIBILITY REGULATIONS 2016 AS AMENDED

COMPLIES WITH THE PROVISION OF THE NOISE EMISSIONS IN THE ENVIRONMENT BY EQUIPMENT FOR USE OUTDOORS
DIRECTIVE DIRECTIVE 2000/14/EC (AS AMENDED) AND THE NOISE EMISSION IN THE ENVIRONMENT BY EQUIPMENT FOR USE
OUTDOORS REGULATIONS 2001[UK] (AS AMENDED).
NAME AND ADDRESS OF THE PERSON WHO KEEPS THE TECHNICAL
DOCUMENTATION — G

CONFORMITY ASSESSMENT PROCEDURE — H

NAME AND ADDRESS OF NOTIFIED BODY: — J

MEASURED SOUND POWER LEVEL ON EQUIPMENT
REPRESENATATIVE FOR THIS TYPE

GUARANTEED SOUND POWER LEVEL FOR THIS EQUIPMENT — K

NET INSTALLED POWER — L

PLACE OF DECLARATION — M
DATE OF DECLARATION dd/mm/yyyy
NAME OF AUTHORISED SIGNATORY
POSITION
XX/XX/XXX

N

SIGNATURE
XXXXXX

JCB Part No:

**Table 38.**

| | |
|---|---|
| A | JCB Vibromax GmbH, Europaallee 113a, 50226 Frechen, Germany. |
| B | Compaction Machines. |

| | |
|---|---|
| C | Refer to: Product and Component Identification (Page 12). |
| D | Refer to: Machine (Page 12). |
| E | ISO (International Organization for Standardization) 20474 part 1 and part 2- 2013. |
| F | Managing Director, JCB Vibromax GMBH, Europaallee 113a, 50226 Frenchen, Germany. |
| G | Group NVH Specialist at JCB World Headquarters Rocester. |
| H | Annex VI Procedure 1. |
| J | Vincotte NV/SA - NB 0026, B-1800 Vilvoorde, Belgium. |
| K | Refer to: Noise Data (Page 146). |
| L | Refer to: Noise Data (Page 146). |
| M | Rocester. |
| N | Engineering Manager. |

# Warranty Information

## Service Record Sheet

**Table 39.**

| | | | |
|---|---|---|---|
| | Signature and stamp | | Date |
| | Annual Insurance (Yes) | | Hours |

**Figure 88. Installation Checklist**

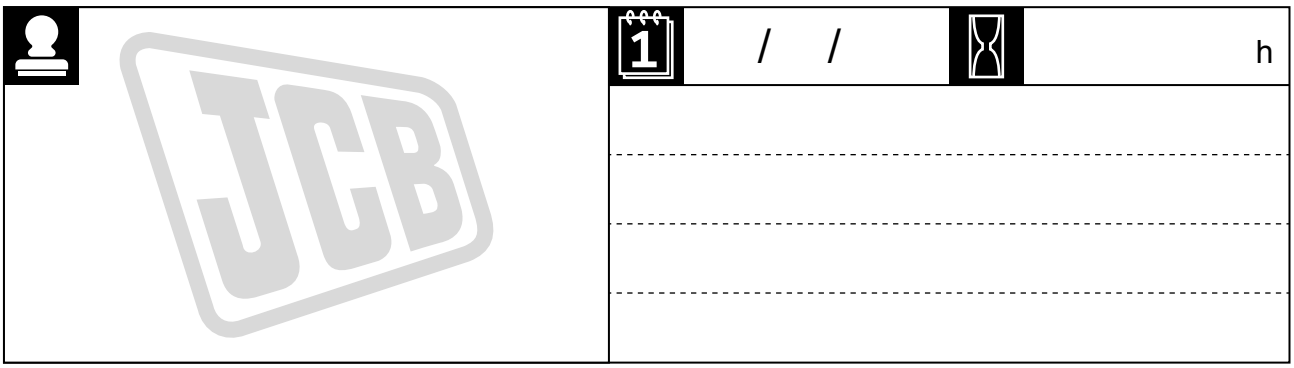


**Figure 89. 1st 100h/3 Month**

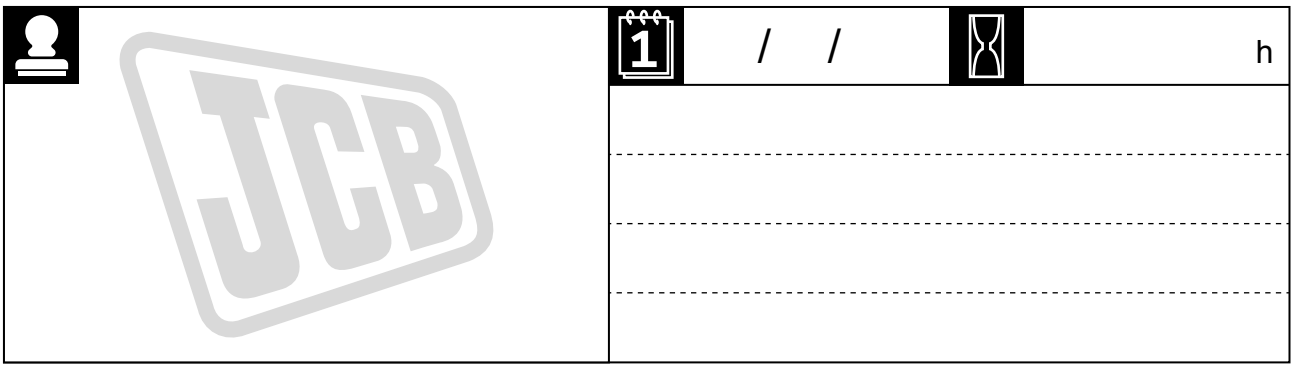


**Figure 90. 500h/12 Month**

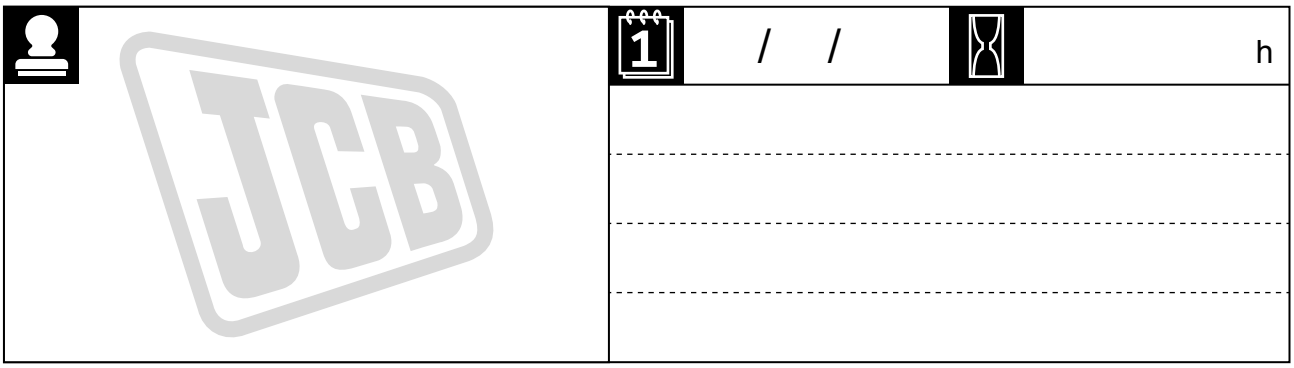

**Figure 91. 1000h/24 Month**

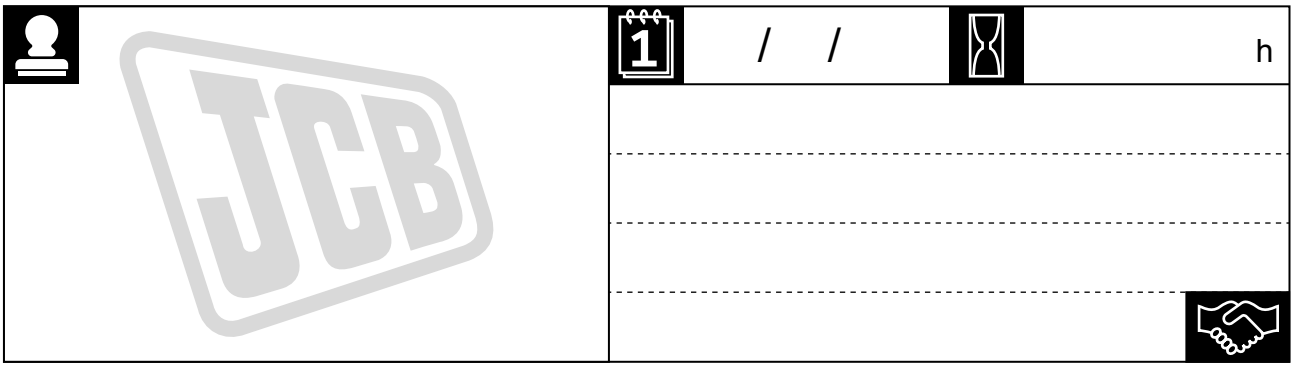


**Figure 92. 2000h/48 Month**

